NOTES:

1. FOR GENERAL NOTES, DESIGN INPUT REFERENCE LIST, DRAWING INDEX, AND REFERENCE DRAWINGS, REFER TO DRAWING 000-M00-SSE0-00501-000.

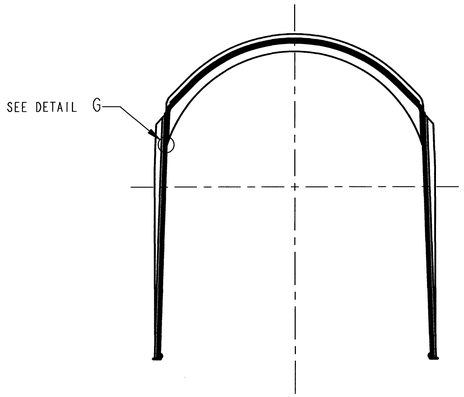

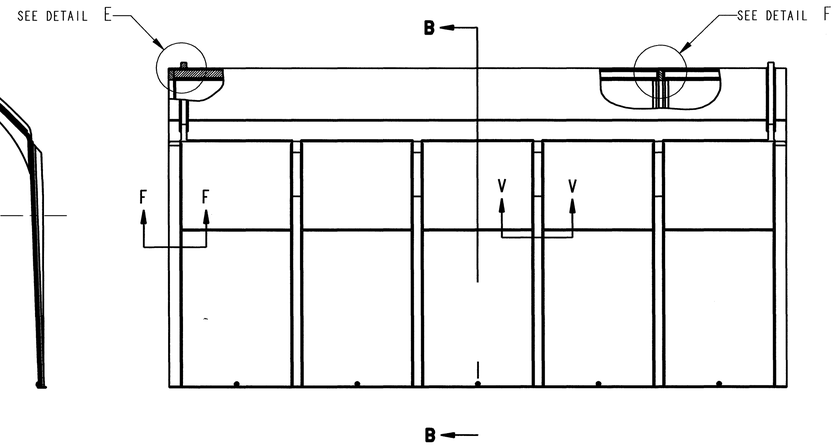

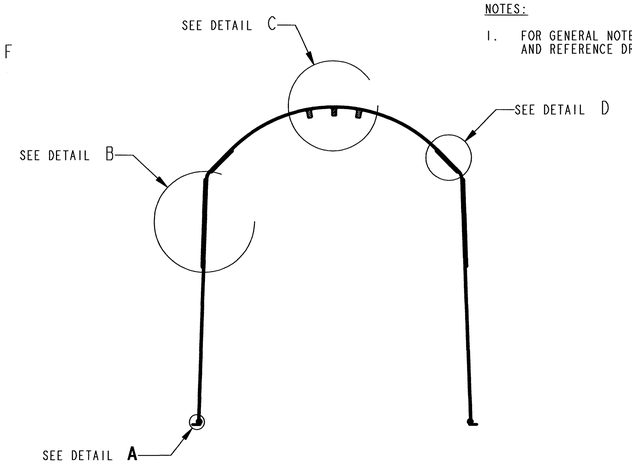

SECTION B-B

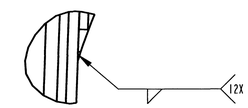

DETAIL G

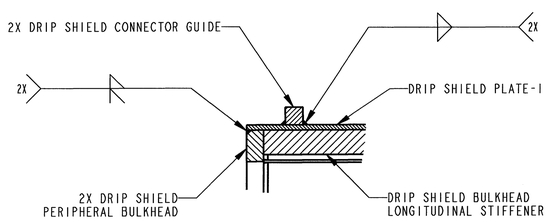

DETAIL E

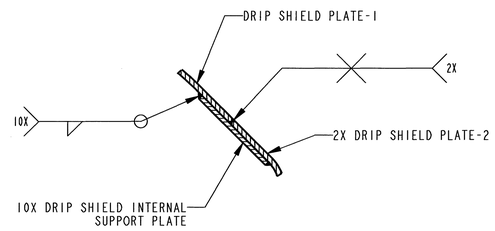

DETAIL D

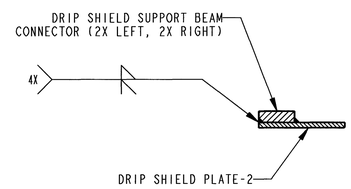

SECTION F-F

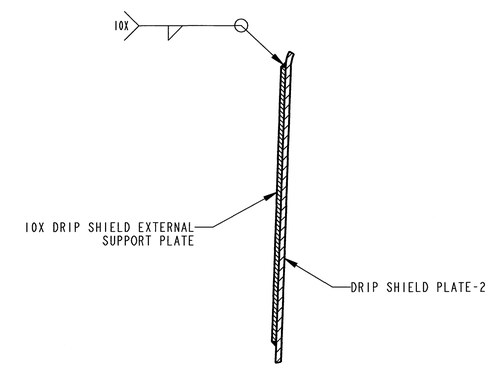

DETAIL B

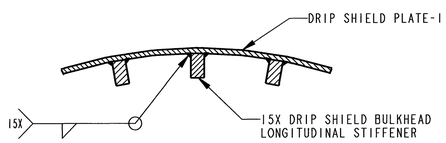

DETAIL C

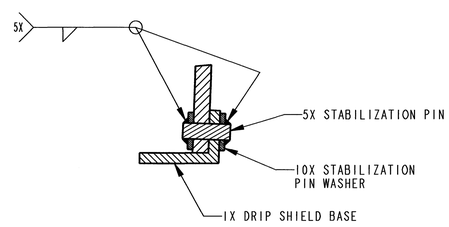

DETAIL A
BOTH SIDES

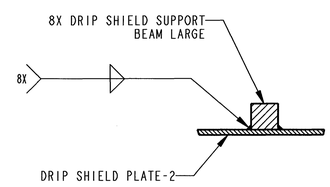

SECTION V-V

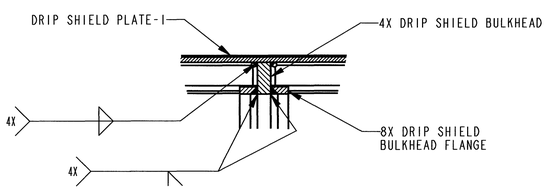

DETAIL F

THIS DRAWING IS PRELIMINARY AND NOT INTENDED FOR CONSTRUCTION, PROCUREMENT OR FABRICATION.

REV	DESCRIPTION	DATE	ORG	CHK	EGS	PE	DEM	QE
00B	EXTENSIVE REVISION TO SHOW FABRICATION WELDS. REMOVED NOTE 3. ADDED DRAWING INDEX. ADDED DESIGN INPUT REFERENCE LIST. ADDED REFERENCE DRAWINGS. UPDATED DRAWING FORMAT.	4/23/07					N/A	
00A	INITIAL ISSUE	3/3/04	ZC	DM	AS	CC	N/A	JH

REVISION HISTORY

APPROVALS	INITIAL/DATE
ORIGINATOR Z. CEYLAN	ZC 3/3/04
CHECKER D. McKENZIE	DM 3/3/04
ENGINEERING GROUP SUPERVISOR A. SCHEIDER	AS 3/3/04
PROJECT ENGINEER C. CHAGNON	CC 3/3/04
DISCIPLINE ENGINEERING MANAGER N/A	N/A
QC CONCURRENCE J. HEANEY	JH 3/3/04

U.S. DEPARTMENT OF ENERGY
Office of Civilian Radioactive Waste Management

BECHTEL SAIC COMPANY, LLC
Management and Operation of the Office of Civilian Radioactive Waste Management Program

DRIP SHIELD
SUB-ASSEMBLY

SAFETY CLASSIFICATION: AS NOTED
DOCUMENT IDENTIFIER: 000-M00-SSE0-00502-000
SIZE: D
SCALE: NONE
CAD FILE: 000-M00-SSE0-00500-000.DRW
REV: 00B
CAGE CODE:

RECORD DESIGNATOR QA:QA