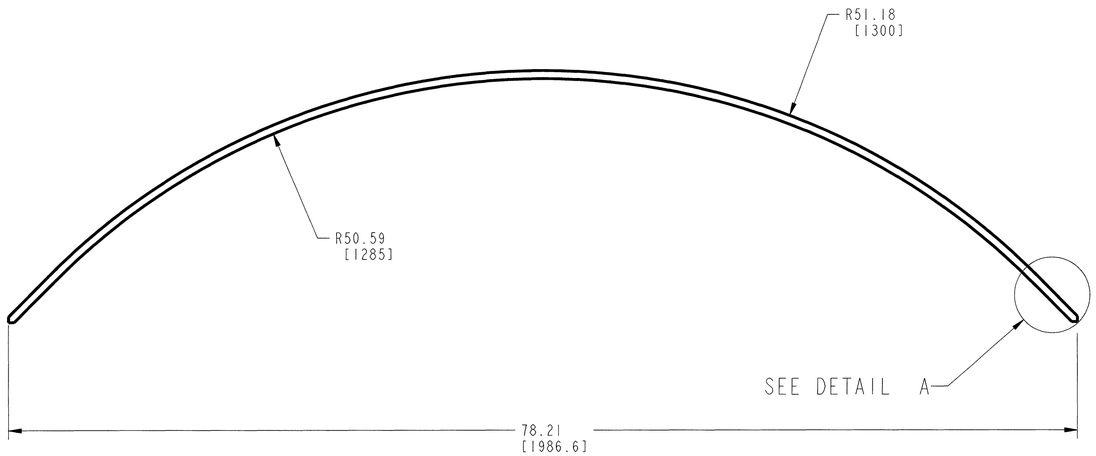

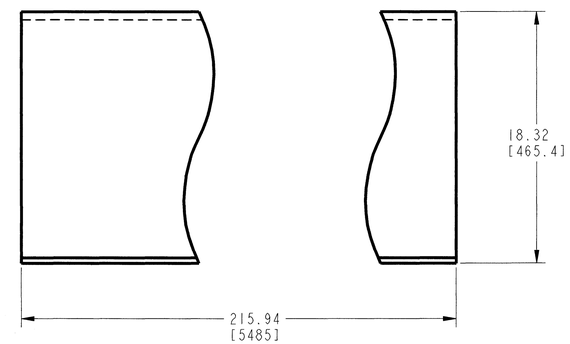

MATERIAL: SB-265 R52400
1 REQUIRED

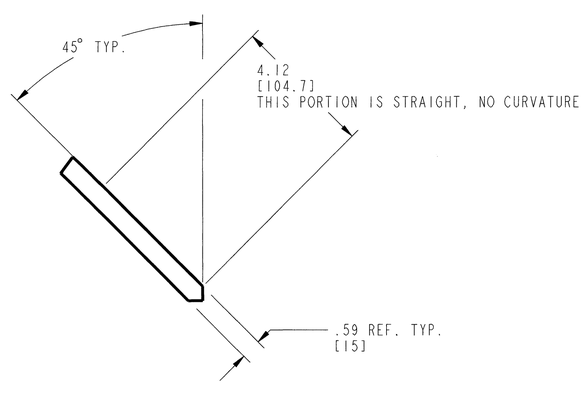

DETAIL A

NOTES:

1. ALL DIMENSIONS ARE IN INCHES
   MILLIMETERS ARE IN BRACKETS.
2. ALL DIMENSIONS ARE REFERENCE ONLY.
3. DO NOT SCALE FROM DRAWING.
4. THE DRIP SHIELD IS CLASSIFIED AS
   A SAFETY CATEGORY ITEM SUBJECT TO
   THE REQUIREMENTS OF THE QARD.

THIS DRAWING IS PRELIMINARY AND NOT INTENDED FOR CONSTRUCTION, PROCUREMENT OR FABRICATION.

DESIGN INPUTS
SEE DOCUMENT INPUT REFERENCE SYSTEM (DIRS)

REV	DESCRIPTION	DATE	DWN	ORG	CHK	VER	LDS DLE	QER	PE
00A	INITAL ISSUE	3/4/04		Z.C.		N/A	AKS		

APPROVALS	INITIAL/DATE
DRAWN: G. GOODSELL	3-3-04
ORIGINATOR: Z. CEYLAN	Z.C. 3/3/04
CHECKED: M. LEWIS	03/03/04
VERIFICATION: N/A	
DESIGN LEAD ENGINEER: A. SCHEIDER	MAR 03 2004
QUALITY ENGINEERING REP: J. HEANEY	3/3/04
PROJECT ENGINEER: C. CHAGNON	FOR 3/4/04

U.S. DEPARTMENT OF ENERGY
Yucca Mountain Site Characterization Project
BECHTEL Civilian Radioactive Waste Management System
SAIC COMPANY, LLC MANAGEMENT & OPERATING CONTRACTOR

DESIGN AND ENGINEERING

DRIP SHIELD PLATE-1

SIZE	SCALE	DOCUMENT IDENTIFIER:	REV
D	NONE	000-M00-SSE0-00601-000-00A	
SAFETY CATEGORY: AS NOTED		CAD FILE: DS PLATE-1.DWG	SHEET 1 OF 1

CODE IDENT:

RECORD DESIGNATOR QA:QA

NAME:GOODSELLG OBJECT:DS-PLATE-1 DATE:03-Mar-04 10:45:52