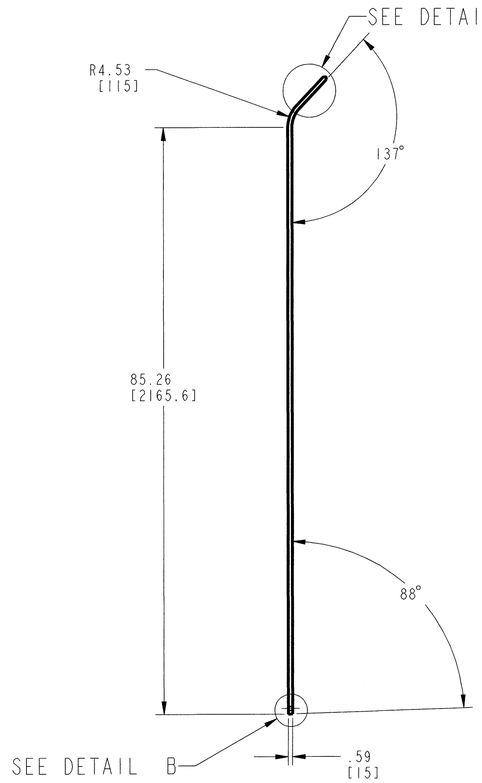

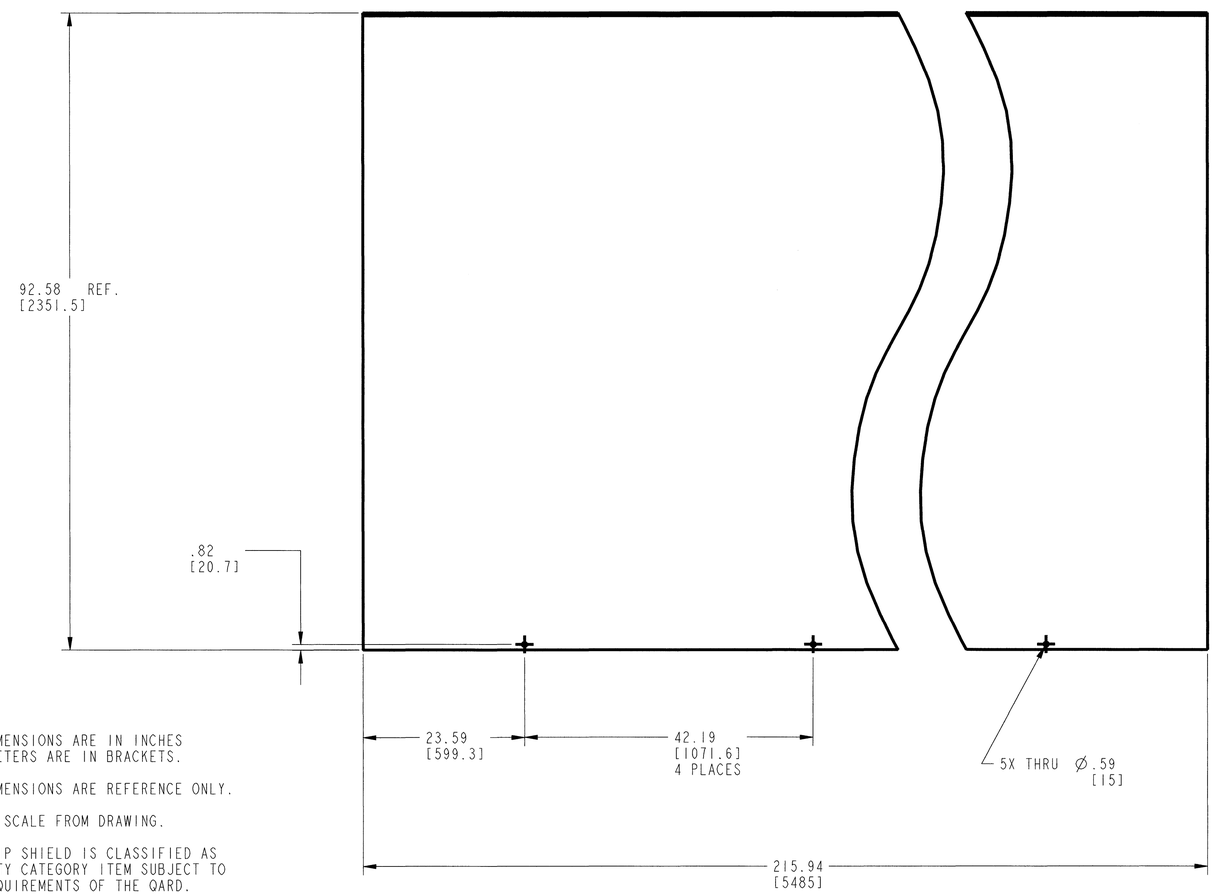

NOTES:

1. ALL DIMENSIONS ARE IN INCHES MILLIMETERS ARE IN BRACKETS.
2. ALL DIMENSIONS ARE REFERENCE ONLY.
3. DO NOT SCALE FROM DRAWING.
4. THE DRIP SHIELD IS CLASSIFIED AS A SAFETY CATEGORY ITEM SUBJECT TO THE REQUIREMENTS OF THE QARD.

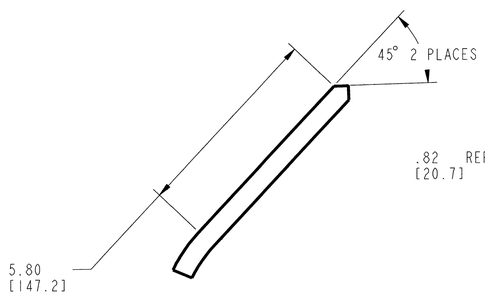

DETAIL A

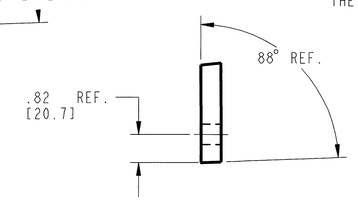

DETAIL B

MATERIAL: SB-265 R52400
2 REQUIRED

THIS DRAWING IS PRELIMINARY AND NOT INTENDED FOR CONSTRUCTION, PROCUREMENT OR FABRICATION.

DESIGN INPUTS
SEE DOCUMENT INPUT REFERENCE SYSTEM (DIRS)

REV	DESCRIPTION	DATE	DWN	ORG	CHK	VER	EOS ILE	QER	PE
00A	INITIAL ISSUE	3/4/04		Z.C.		N/A			

APPROVALS	INITIAL/DATE
DRAWN G. GOODSELL	3-3-04
ORIGINATOR Z. CEYLAN	3/3/04
CHECKED M. LEWIS	03/07/04
VERIFICATION N/A	
DESIGN LEAD ENGINEER A. SCHEIDER	1-APR-2004
QUALITY ENGINEERING REP J. HEANEY	3/3/04
PROJECT ENGINEER C. CHAGNON FOR	3/4/04

U.S. DEPARTMENT OF ENERGY
Yucca Mountain Site Characterization Project
BECHTEL SAIC COMPANY, LLC — Civilian Radioactive Waste Management System MANAGEMENT & OPERATING CONTRACTOR

DESIGN AND ENGINEERING
DRIP SHIELD
PLATE-2

SIZE	SCALE	DOCUMENT IDENTIFIER:	REV
D	NONE	000-M00-SSE0-00701-000-00A	
QA CLASSIFICATION: AS NOTED		CAD FILE: DS PLATE-2 DWG.	SHEET 1 OF 1

CODE IDENT:

RECORD DESIGNATOR QA:QA

NAME:GOODSELLG OBJECT:DS_PLATE_2 DATE:03-Mar-04 10:01:03