NOTES:

1. ALL DIMENSIONS ARE IN INCHES
   MILLIMETERS ARE IN BRACKETS.
2. ALL DIMENSIONS ARE REFERENCE ONLY.
3. DO NOT SCALE FROM DRAWING.
4. THE DRIP SHIELD IS CLASSIFIED AS IMPORTANT TO WASTE ISOLATION (ITWI).

DESIGN INPUT REFERENCE LIST

BASIS OF DESIGN FOR THE TAD CANISTER-BASED REPOSITORY DESIGN CONCEPT 000-3DR-MGR0-00300-000-000.

REFERENCE DRAWINGS

000-M00-SSE0-00101-000	INTERLOCKING DRIP SHIELD CONFIGURATION
000-M00-SSE0-00102-000	INTERLOCKING DRIP SHIELD CONFIGURATION
000-M00-SSE0-00103-000	INTERLOCKING DRIP SHIELD CONFIGURATION

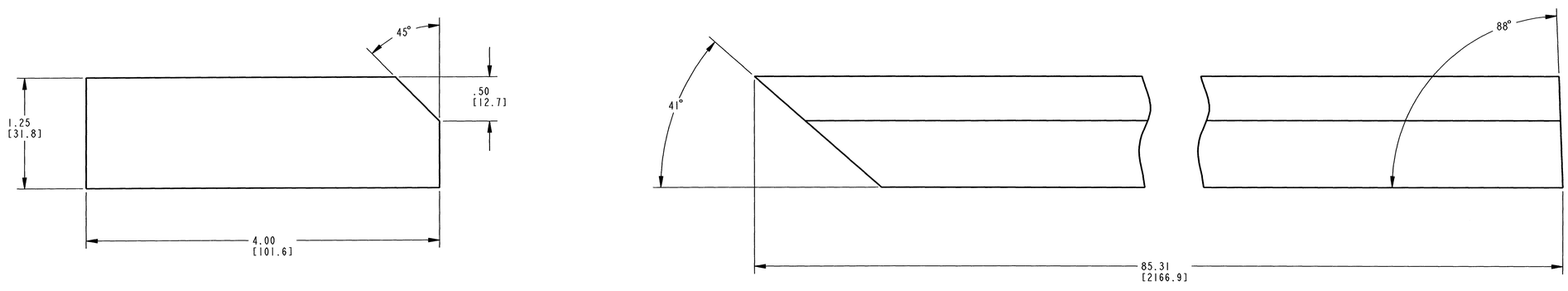

MATERIAL: SB-265 (UNS R56404)
2 REQUIRED

THIS DRAWING IS PRELIMINARY AND NOT INTENDED FOR CONSTRUCTION, PROCUREMENT OR FABRICATION.

REV	DESCRIPTION	DATE	ORG	CHK	EGS	PE	DEM		QE
00B	EXTENSIVE REVISION - CHANGED MATERIAL FROM SB-265 (UNS R56405) TO SB-265 (UNS R56404) PER TMRB-2006-004. REVISED DIMENSIONING SCHEME. REVISED NOTE 4. ADDED DESIGN INPUT REFERENCE LIST. ADDED REFERENCE DRAWINGS.	4/23/07	[signature]	[signature]	[signature]	[signature]	N/A		[signature]
00A	INITIAL ISSUE	3/3/04	ZC	TD	AS	CC	N/A		JH

REVISION HISTORY

APPROVALS	INITIAL/DATE
ORIGINATOR Z. CEYLAN	ZC 3/3/04
CHECKER T. DEBUES	TD 3/3/04
ENGINEERING GROUP SUPERVISOR A. SCHEIDER	AS 3/3/04
PROJECT ENGINEER C. CHAGNON	CC 3/3/04
DISCIPLINE ENGINEERING MANAGER N/A	N/A
QE CONCURRENCE J. HEANEY	JH 3/3/04

U.S. DEPARTMENT OF ENERGY
Office of Civilian Radioactive Waste Management

BECHTEL SAIC COMPANY, LLC
Management and Operation of the Office of Civilian Radioactive Waste Management Program

DRIP SHIELD
RIGHT SUPPORT BEAM CONNECTOR

SAFETY CLASSIFICATION	DOCUMENT IDENTIFIER:	
AS NOTED	000-M00-SSE0-01701-000	
SIZE / SCALE	CAD FILE	REV
D / NONE	000-M00-SSE0-01701-000.DRW	00B

CAGE CODE:

RECORD DESIGNATOR QA:QA