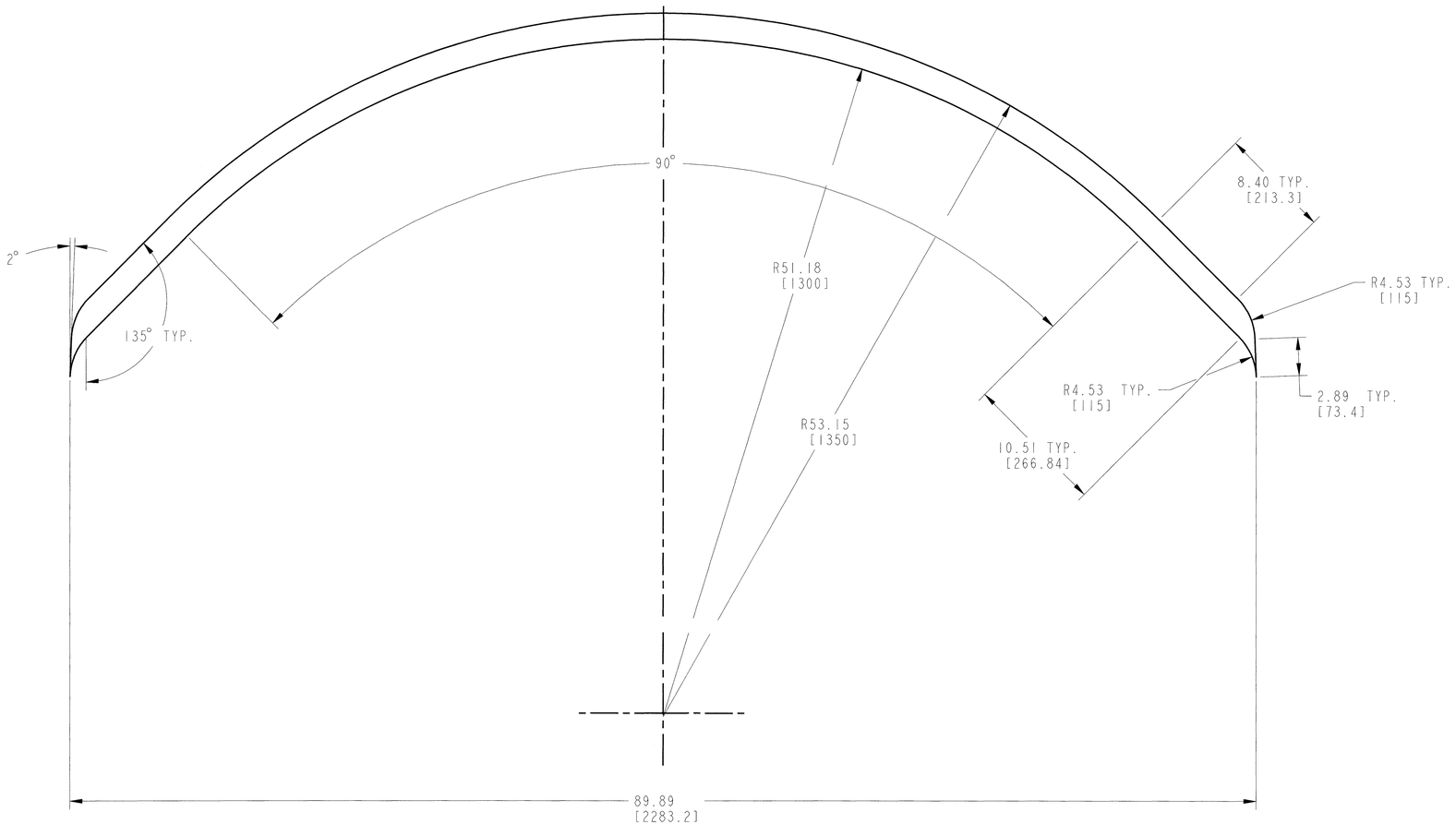

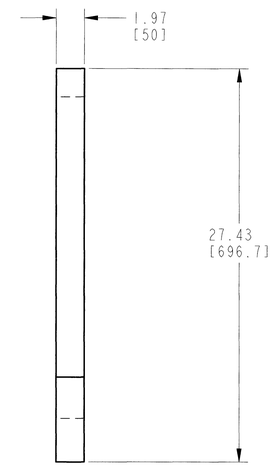

MATERIAL: SB-265 R52400
2 REQUIRED

NOTES:

1. ALL DIMENSIONS ARE IN INCHES MILLIMETERS ARE IN BRACKETS.
2. ALL DIMENSIONS ARE REFERENCE ONLY.
3. DO NOT SCALE FROM DRAWING.
4. THE DRIP SHIELD IS CLASSIFIED AS A SAFETY CATEGORY ITEM SUBJECT TO THE REQUIREMENTS OF THE QARD.

THIS DRAWING IS PRELIMINARY AND NOT INTENDED FOR CONSTRUCTION, PROCUREMENT OR FABRICATION.

DESIGN INPUTS
SEE DOCUMENT INPUT REFERENCE SYSTEM (DIRS)

REV	DESCRIPTION	DATE	DRN	ORG	CHK	VER	EGS DLE	QER	PE
00A	INITIAL ISSUE	3/4/04	[signature]	Z.C.	T.D.	N/A	AKS	JEC	[signature]

APPROVALS	INITIAL/DATE
DRAWN G. GOODSELL	[signature] 3-4-04
ORIGINATOR Z. CEYLAN	Z.C. 3/4/04
CHECKED T. DEBUES	T.D. 3/4/04
VERIFICATION N/A	
DESIGN LEAD ENGINEER A. SCHEIDER	AKS MAR 09, 2004
QUALITY ENGINEERING REP J. E. CLARK	JEC 3/4/04
PROJECT ENGINEER C. CHAGNON	C. LINDEN FOR [signature] 3/4/04

U.S. DEPARTMENT OF ENERGY
Yucca Mountain Site Characterization Project
BECHTEL SAIC COMPANY, LLC — Civilian Radioactive Waste Management System MANAGEMENT & OPERATING CONTRACTOR

DESIGN AND ENGINEERING
DRIP SHIELD
CONNECTOR GUIDE

SIZE	SCALE	DOCUMENT IDENTIFIER:	REV
D	NONE	000-M00-SSE0-02001-000-00A	
SAFETY CATEGORY: AS NOTED		CAD FILE: DS_CNCTR_GUIDE.DWG.	SHEET 1 OF 1

CAGE CODE:

RECORD DESIGNATOR QA:QA

SIZE D DOCUMENT IDENTIFIER: 000-M00-SSE0-02001-000-00A REV