OCRWM	DESIGN CALCULATION OR ANALYSIS COVER SHEET	1. QA: QA 2. Page 1

3. System DOE SNF Disposal Container	4. Document Identifier CAL-DSU-NU-000003 REV 00A
5. Title Calculation of Isotopic Bias and Uncertainty for BWR SNF	
6. Group Risk and Criticality	
7. Document Status Designation ☒ Preliminary ☐ Final ☐ Cancelled	
8. Notes/Comments Performing a AP-2.14Q *Review of Technical Products and Data* is not necessary for this product since the results of this calculation do not impact any other organization.	

Attachments	Total Number of Pages
I. Cooper BWR SAS2H Data and Results	8
II. Gundremmingen BWR SAS2H Data and Results	10
III. Japan Power Demonstration Reactor (JPDR) BWR SAS2H Data and Results	18
IV. 44-BWR Waste Package Drawings	5
V. MCNP Input Development	16
VI. MCNP Results	4
VII. Bias Determination	8
VIII. Normal Distribution Determination	2
IX. General BWR Case Lower Uniform Tolerance Band	4
X. Simple BWR Case Normal Distribution Tolerance Band	2
XI. Index of Compact Disc Attachment	3
XII. Compact Disc Attachment	N/A

RECORD OF REVISIONS

9. No.	10. Reason For Revision	11. Total # of Pgs.	12. Last Pg. #	13. Originator (Print/Sign/Date)	14. Checker (Print/Sign/Date)	15. QER (Print/Sign/Date)	16. Approved/Accepted (Print/Sign)	17. Date
00A	Initial issue	124	XI-3	Jason Huffer Jason Huffer 10/30/2003	John Scaglione John M. Scaglione 10/30/03	Ajulena Barnes Ajulena Barnes 10/30/2003	Abdelhalim Alsaed aalsaed	10/30/03

INTENTIONALLY LEFT BLANK

CONTENTS

Page
1 PURPOSE 5
2 METHOD 7
3 ASSUMPTIONS 9
4 USE OF COMPUTER SOFTWARE 11
4.1 SAS2H 11
4.2 MCNP 11
5 CALCULATION 13
5.1 SAS2H FUEL DEPLETION DESCRIPTION 14
5.2 FUEL ASSEMBLY DESIGN 16
5.2.1 Cooper 17
5.2.2 Gundremmingen 18
5.2.3 Japan Power Demonstration Reactor (JPDR) 19
5.2.4 SAS2H Material Specifications 20
5.2.5 SAS2H Results 20
5.2.6 MCNP Representation of the 44-BWR Flooded Waste Package 22
5.2.7 MCNP Input Conversions 27
5.2.8 MCNP Results 28
5.2.9 Bias and Uncertainty Determination 29
5.2.10 Tolerance Limit Determination 32
6 RESULTS 37
7 REFERENCES 39
7.1 DOCUMENTS CITED 39
7.2 CODES, STANDARDS, PROCEDURES AND REGULATIONS 40
7.3 DATA USED BY DATA TRACKING NUMBER 41
7.4 SOFTWARE CODES 41
8 ATTACHMENTS 43

FIGURES

Page
5-1. Cross Section of the Control Blade and Fuel Assembly for Cooper 18
5-2. Cross Section of Control Blade and Fuel Assembly for Gundremmingen 19
5-3. Typical Cross Section of the Control Blade and Fuel Assembly for JPDR 19
6-1. Simple BWR Lower Limit Plot 38
6-2. General BWR Lower Limit Plot 38

TABLES

Page
3-1. Measured Isotopes Not Used 10
5-1. SAS2H Material Specification for Zircaloy-2 16
5-2. SAS2H Material Specification for Zircaloy-4 16
5-3. Trace Isotopes Specified in SAS2H Fresh Fuel Compositions 17
5-4. Statistical Tabulation of SAS2H Results 21
5-5. Fuel Assembly Data Required for MCNP 22
5-6. Material Specifications for SB-575 N06022 24
5-7. Material Specifications for SS316NG 25
5-8. Material Specifications for Neutronit A978 with 1.62 weight percent Boron 25
5-9. Material Specifications for Al 6061 25
5-10. Material Specifications for Grade 70 A516 Carbon Steel 26
5-11. Material Specifications for Zircaloy-2 26
5-12. Material Specifications for Zircaloy-4 26
5-13. Initial Oxygen Content of UO_2 Fuel 28
5-14. Summary of MCNP Results 29
5-15 Interpolations for D Value 34
6-1 Summary of Results 37
8-1. Attachment Listing 43

1 PURPOSE

The objective of *Calculation of Isotopic Bias and Uncertainty for BWR SNF* is to quantify the computational bias and uncertainty in the multiplication factor (k_{eff}) to be used for Boiling Water Reactor (BWR) spent nuclear fuel (SNF) burn-up credit. The scope of this bias and uncertainty determination covers 38 different radiochemical assay (RCA) spent fuel samples from 14 different fuel assemblies that were irradiated in four different BWRs. The irradiated fuel samples evaluated span an enrichment range of 2.53 weight percent U-235 through 3.95 weight percent U-235. They contain gadolinium content up to 5 weight percent Gd and burn-ups from 2.16 Gigawatt days per metric ton (GWd/MTU) to 65.5 (GWd/MTU).

This report is an engineering calculation supporting the development of analyses to be used for License Application of the monitored geologic repository, and was performed under OCRWM procedure AP-3.12Q, *Design Calculations and Analyses*. This calculation is subject to *Quality Assurance Requirements and Description* (DOE 2003), per the activity evaluation under *Technical Work Plan for: Risk and Criticality Department* (BSC 2003b).

INTENTIONALLY LEFT BLANK

2 METHOD

The analytical method employed for this evaluation was the SAS2H control module of the SCALE 4.4a code system (SCALE V4.4A, STN: 10129-4.4A-00) and MCNP4b2 (MCNP V4B2LV, STN: 30033-V4B2LV). Based upon fuel assembly design, power history, and operating data for the specific assemblies, a computational representation was developed for use with SAS2H and MCNP. The SAS2H module is used to perform a fuel depletion analysis using operating history parameters to predict the isotopic concentrations in localized areas of assembly pins. The isotopic concentrations predicted by the SAS2H module are then used as material input to MCNP to generate k_{eff} in a flooded 44-BWR waste package. These values are then compared with MCNP results using the measured concentrations as the fuel material in the MCNP inputs.

INTENTIONALLY LEFT BLANK

3 ASSUMPTIONS

3.1 It was assumed that using the Al material cross-section for Zn in the MCNP cases has a negligible impact on the results of criticality calculations. The basis for this assumption is that the neutronic characteristics for Zn and Al are sufficiently similar. The Zn neutron cross-section libraries were not available for MCNP. In addition, the Zn material that is substituted only appears in aluminum 6061 in trace amounts (BSC 2003a, p.7).

3.2 It was assumed that during the fuel irradiation process of power production the total fuel mass does not significantly change and the oxygen content of the original UO_2 fuel remains constant. The basis for this assumption is that the rod casing contains the fuel throughout the process, and the oxygen doesn't absorb neutrons and isn't a fission product.

3.3 It was assumed that the omission of the isotopes presented in Table 3-1 from the MCNP cases would have a negligible effect on system reactivity. The rationale for these isotopes being omitted is that:

1) These isotopes were not available in the MCNP cross section libraries.
2) The Cooper data set presented the isotopes Cm-243 and Cm-244 in total radiation units, and the individual concentrations were not separable.
3) The isotopic concentrations were very small (< 0.15 weight percent).

Table 3-1. Measured Isotopes Not Used

Reactor	Measured Isotope	Average Measured Concentration (wt.%)
Limerick	Nd-146 [a]	0.1305%
	Nd-148 [c]	0.0645%
	Nd-150 [a]	0.0320%
	Cm-242 [c]	0.0000%
	Cm-243 [c]	0.0001%
	Cm-245 [c]	0.0013%
	Cm-246 [c]	0.0003%
Cooper	Se-79 [a]	0.0001%
	Sr-90 [a]	0.0308%
	Sn-126 [a]	0.0004%
	Cm-243+ Cm-244 [b]	0.0891%
JPDR	Ru-106 [a]	0.000%
	Ce-144 [a]	0.000%
	Nd-144 [a]	0.0032%
	Nd-146 [a]	0.0145%
	Nd-150 [a]	0.0143%

Source: Limerick data from (BSC 2003a, p. 24)

Notes: [a] Cross-sections of these isotopes were not available in the MCNP cross-section libraries.
[b] The Curium isotopes were measured in total and could not be separated into individual isotope concentrations.
[c] These isotopes were not included in the Limerick MCNP calculations (BSC 2003a, Attachment III)

3.4 It was assumed that analytical procedures used in *Validation of Scale (SAS2H) Isotopic Predictions for BWR Spent Fuel* (Hermann and DeHart 1998) are reproducible. Such that they would be applicable to spent nuclear fuel rods with only an operational history and averaged initial enrichment data available.

Specifically:

1) The method for estimating the coolant density was developed that applies design and operating parameters that were included in each data set by Hermann and DeHart (1998). The rational for accepting this assumption it that a sensitivity study in Appendix H of Hermann and DeHart (1998) documents the isotopic changes that result from +/- 20 percent perturbations in moderator density.
2) Cladding temperatures were provided by direct measurements for the JPDR reactor. Cooper, Gundremmingen, and Limerick reactors were estimated to have the same cladding temperature. The rational for this assumption is that boiling water reactors demonstrate very consistent temperature ranges due to the physical property of boiling water.

4 USE OF COMPUTER SOFTWARE

4.1 SAS2H

The SAS2H control module of the baselined SCALE, Version 4.4a, (CRWMS M&O 2000a) modular code system was used to perform the fuel assembly depletion calculations required for this evaluation. The software specifications are as follows:

- Program Name: SAS2H of the SCALE Modular Code System
- Version/Revision Number: Version 4.4a
- Status/Operating System: Qualified/HP-UX B.10.20
- Software Tracking Number (STN) Number: 10129-4.4A-00
- Computer Type: Hewlett Packard (HP) 9000 Series Workstations
- Computer Processing Unit (CPU) number: 700887

The input and output files for the various SAS2H calculations were documented electronically in Attachment XII to this calculation as described in Sections 5 and 8, such that an independent repetition of the software use may be performed. The SAS2H software used was:

(a) appropriate for the application of commercial fuel assembly depletion
(b) used only within the range of validation as documented in *Users Manual for SCALE-4.4A* (CRWMS M&O 2000a), and Validation Test Report (VTR) for SCALE-4.4A (CRWMS M&O 2000b) and,
(c) obtained from Software Configuration Management in accordance with appropriate procedures.

4.2 MCNP

The baselined MCNP4b2 code (CRWMS M&O 1998a) was used to calculate the neutron multiplication factor for the various spent fuel compositions. The software specifications are as follows:

- Program Name: MCNP
- Version/Revision Number: Version 4B2LV
- Status/Operating System: Qualified/HP-UX B.10.20
- Computer Software Configuration Item Number: 30033-V4B2LV
- Computer Type: HP 9000 Series Workstations
- CPU number: 700887

The input and output files for the various MCNP calculations are documented electronically in Attachment XII to this calculation file as described in Sections 5 and 8, such that an independent repetition of the software use may be performed. The MCNP software used was:

(a) appropriate for the application of multiplication factor calculations

(b) used only within the range of validation as documented throughout *MCNP-A General Monte Carlo N-Particle Transport Code* (Briesmeister 1997) and *Software Qualification Report for MCNP Version 4B2, A General Monte Carlo N-Particle Transport Code* (CRWMS M&O 1998c), and
(c) obtained from Software Configuration Management in accordance with appropriate procedures.

5 CALCULATION

The method of calculation is based upon the calculation of isotopic concentrations of irradiated fuel using the SAS2H sequence of the SCALE computer code system. All SAS2H inputs were set up to represent the assembly axial node where the measured fuel sample was located. This report calculates the combined systematic and computational bias and uncertainty associated with a SAS2H/MCNP integral approach to calculating k_{eff} for burned fuel systems.

The measured isotopic concentrations used in this evaluation are published in the derivative works: *Limerick Unit 1 Radiochemical Assay Comparisons to SAS2H Calculations* (BSC 2003a) and *Validation of SCALE (SAS2H) Isotopic Predictions for BWR Spent Fuel* (Hermann and DeHart 1998).

The MCNP representation of a flooded 44 BWR waste package was used in the above Limerick calculation (BSC 2003a, Attachment III, file 1m). The 44 BWR waste package MCNP representation was used unchanged, only modifying the specific fuel pins to match the individual reactor characteristics. The referenced MCNP representation of the 44 BWR waste package matches the physical drawings presented in Attachment IV.

In the case of the information from Hermann and DeHart (1998), the thirty SAS2H depletion cases from Cooper, Gundremmingen, and JPDR BWRs were developed and executed for the validation of the SAS2H depletion code. These inputs were rerun utilizing the SCALE version 4.4a SAS2H control module.

Limerick Unit 1 Radiochemical Assay Comparisons to SAS2H Calculations (BSC 2003a) developed and executed the SAS2H depletion cases for the Limerick Unit 1 Reactor. In addition, that report used the MCNP representation of a BWR waste package.

Both the isotopic concentrations from the RCA data set and those calculated by the SAS2H depletion cases were performed. The difference (k_{SAS2H} -k_{RCA}) or Δk_{eff} is the basis for this bias and uncertainty determination.

To assure that there is no loss of continuity with source documents, Attachments I through III provide tables of the individual SAS2H case titles from the source documents.

The bias is a measure of the systematic difference between the population mean of the test results from a measurement process and the accepted reference value of the property being measured. In this case, the property of interest is the impact of the isotopic concentrations in commercial BWR spent nuclear fuel on the neutron multiplication factor (k_{eff}) in a flooded waste package. The accepted reference values are neutron multiplication factors derived from laboratory radiochemical assays (k_{RCA}) from BWR SNF samples. The test results are the neutron multiplication factors derived from SAS2H mathematical representations of BWR nodes (k_{SAS2H}).

In the event the isotopic concentrations calculated by the SAS2H depletion cases over predicts the waste package multiplication factor generated by the RCA isotopic concentrations (i.e.,

$k_{SAS2H} > k_{RCA}$), there is a positive bias. Per *Disposal Criticality Analysis Methodology Topical Report* (YMP 2003), positive biases are set to zero and the conservative margin is left in place. However, in the event the results are under predicted, the isotopic concentrations from the SAS2H depletion cases projects a lower multiplication factor than projected by the measured isotopes (i.e., kSAS2H < k_{RCA}) there is a negative bias. A negative bias is then assigned to multiplication factors that are generated from isotopic concentrations resulting from SAS2H depletion cases.

5.1 SAS2H FUEL DEPLETION DESCRIPTION

The SAS2H control sequence accesses five calculational modules of the SCALE code system for performing fuel depletion and decay calculations. The five modules include BONAMI, NITAWL-II, XSDRNPM, COUPLE, and ORIGEN-S. Each of the modules has a specific purpose in the sequence to perform the fuel depletion and decay calculations. The following provides a brief description of what each module does with a more detailed description provided in *Users Manual for SCALE-4.4A* (CRWMS M&O 2000a).

- BONAMI – applies the Bondarenko method of resonance self-shielding to nuclides for which Bondarenko data are available.
- NITAWL-II – performs Nordheim resonance self-shielding corrections for nuclides that have resonance parameter data available.
- XSDRNPM – performs a one-dimensional neutron transport calculation on a specified geometry to facilitate production of cell-weighted cross sections for fuel depletion calculations.
- COUPLE – updates all cross section constants included on an ORIGEN-S working nuclear data library with data from the cell-weighted cross section library obtained from the XSDRNPM calculation. Additionally, the weighting spectrum produced by XSDRNPM is applied to update all nuclides in the ORIGEN-S working library, which were not included in the XSDRNPM calculation.
- ORIGEN-S – performs point depletion, buildup, and decay calculations for the specified assembly irradiation history. ORIGEN-S can also be run as a stand-alone case to provide isotopic concentrations at various decay times.

The SAS2H control module uses ORIGEN-S to perform a point depletion calculation for the fuel assembly section described in the SAS2H input file. The ORIGEN-S module uses cell-weighted cross sections based on one-dimensional transport calculations performed by XSDRNPM. One-dimensional transport calculations are performed on two mock-ups, path A and path B, to calculate energy dependent spatial neutron flux distributions necessary to perform cross section cell-weighting calculations.

The path A model is simply a unit cell of the fuel assembly lattice containing a fuel rod. In the path A model, the fuel, clad, and moderator are modeled explicitly. The only modification required developing the path A model is the conversion of the fuel assembly's square lattice unit cell perimeter to a radial perimeter conserving moderator volume within the unit cell (exterior to the fuel rod cladding). The SAS2H control module performs this modification automatically. A one-dimensional transport calculation is performed on the path A model for each energy group,

and the spatial flux distributions for each energy group are used to calculate cell-weighted cross sections for the fuel.

The path B model is a larger representation of the assembly than the path A model. The path B model approximates spectral effects due to heterogeneity within the fuel assembly such as water gaps, burnable poison rods, control rods, or axial power shaping rods. The structure of the path B model is based on a uniform distribution of non-fuel lattice cells. In reality, most fuel assemblies do not have uniformly distributed non-fuel lattice cells. However, the approximation that the cells are uniform is considered acceptable within these calculations as documented in Section S2.2.3.1 of *Users Manual for SCALE-4.4A* (CRWMS M&O 2000a).

The basic structure of the path B model for the fuel assembly depletion calculations performed in this analysis included an inner region composed of a representation of the non-fuel assembly lattice cell. A region containing the homogenization of the path A model surrounds the inner region in the path B model. A final region representing the moderator in the assembly-to-assembly spacing surrounds the homogenized region in the path B model. The size of each radial region that surrounds the inner region in the path B model is determined by conserving both the fuel-to-moderator mass ratio and the fuel-to-absorber (burnable poison) mass ratio in the corresponding section of the fuel assembly. The cell-weighted cross-sections from the path A model are applied to the homogenized region during the path B model transport calculations. New cell-weighted cross sections for each energy group are then developed using the unit cell spatial flux distribution results from the path B model transport calculations. These cell-weighted cross sections are ultimately used in the point depletion calculations performed by ORIGEN-S to calculate the depleted fuel isotopic compositions in the corresponding fuel assembly. A detailed description of how SAS2H produces time-dependent cross sections is documented in Section S2.2.4 of *Users Manual for SCALE-4.4A* (CRWMS M&O 2000a).

The path B model for the fuel assembly configuration is provided to the SAS2H control module. The essential rule in deriving the zone radii is to maintain the relative volumes for all zones in the actual assembly (CRWMS M&O 2000a, Section S2.2.5).

5.2 FUEL ASSEMBLY DESIGN

What follows is a general description of the fuel and the location of the fuel pins under consideration.

Input files for the Cooper, Gundremmingen the SAS2H codes were copied from Hermann and DeHart (1998). The input files were modified by using the specification for Zircaloy-2 in Table 5-1 for the fuel cladding. The channel specification was changed to Zircaloy-4 as specified in Table 5-2.

Table 5-1. SAS2H Material Specification for Zircaloy-2

Element	ZAID	Wt.%
Oxygen	8016	0.125
Chromium	24000	0.10
Iron	26000	0.135
Nickel	28000	0.055
Tin	50000	1.45
Zirconium	40000	98.135
Density = 6.55 g/cm^3		

Source: DTN: MO9906RIB00048.000

Table 5-2. SAS2H Material Specification for Zircaloy-4

Element	ZAID	Wt.%
Oxygen	8016	0.125
Chromium	24000	0.10
Iron	26000	0.21
Tin	50000	1.45
Zirconium	40000	98.115
Density = 6.56 g/cm^3		

Source: DTN: MO9906RIB00048.000

In SAS2H a number of additional isotopes are specified in trace amounts in the fresh fuel composition to assure that buildup and decay is tracked during the depletion calculation. Isotopes with concentrations less than 10^{-8} are screened out unless specified in the trace isotope listing, (CRWMS M&O 2000a, Table S2.5.4). Table 5-3 lists the trace isotopes, which are specified with concentrations of 10^{-21} atoms/barn-cm in the inputs.

Table 5-3. Trace Isotopes Specified in SAS2H Fresh Fuel Compositions

Count	All BWR Reactors	*Element*	Z[a]	Count	All BWR Reactors	*Element*	Z[a]
1	Ag-109	*Silver*	47	31	Pm-147	*Promethium*	61
2	Ba-136	*Barium*	56	32	Pm-148		
3	Ce-144	*Cerium*	58	33	Pm-149		
4	Cs-134	*Cesium*	55	34	Pr-141	*Praseodymium*	59
5	Cs-135			35	Pr-143		
6	Cs-137			36	Ru-101	*Ruthenium*	44
7	Eu-151	*Europium*	63	37	Ru-106		
8	Eu-153			38	Rh-103	*Rhodium*	45
9	Eu-154			39	Rh-105		
10	Eu-155			40	Sb-124	*Antimony*	51
11	Gd-154	*Gadolinium*	64	41	Sm-147	*Samarium*	62
12	Gd-155			42	Sm-148		
13	Gd-157			43	Sm-149		
14	Gd-158			44	Sm-150		
15	Gd-160			45	Sm-151		
16	Kr-83	*Krypton*	36	46	Sm-152		
17	Kr-85			47	Sn-126	*Tin*	50
18	La-139	*Lanthanum*	57	48	Sr-90	*Strontium*	38
19	Mo-95	*Molybdenum*	42	49	Tc-99	*Technetium*	43
20	Nb-94	*Niobium*	41	50	U-232	*Uranium*	92
21	Nb-95			51	U-233		
22	Nd-143	*Neodymium*	60	52	Xe-131	*Xenon*	54
23	Nd-144			53	Xe-132		
24	Nd-145			54	Xe-135		
25	Nd-146			55	Xe-136		
26	Nd-147			56	Y-89	*Yttrium*	39
27	Nd-148			57	Zr-93	*Zirconium*	40
28	Nd-150			58	Zr-94		
29	Pd-105	*Palladium*	46	59	Zr-95		
30	Pd-108		46				

Notes: [a] Z indicates the number of protons in the atomic nucleus.

5.2.1 Cooper

Cooper used 7x7 General Electric (GE) fuel assemblies comprising 49 fuel rods as shown in Figure 5-1. Rods ADD2966 and ADD2974 were pulled from bundle CZ346. ADD2966 was sampled at three locations –55.107 cm (B), 218.869 cm (J) and 291.087 cm (U). The hot pellet

density of the fuel was 9.73 g/cm^3 and the enrichment was 2.93 weight percentage U-235. The clad material was Zircaloy-2. The fuel burn-up ranged from 17.84 to 33.94 GWd/MTU. The cooling time for ADD2966 was 5.35 years and for ADD 2974, 5.28 years. The specific power ranged from 4.38 to 287.01 MW/MTU.

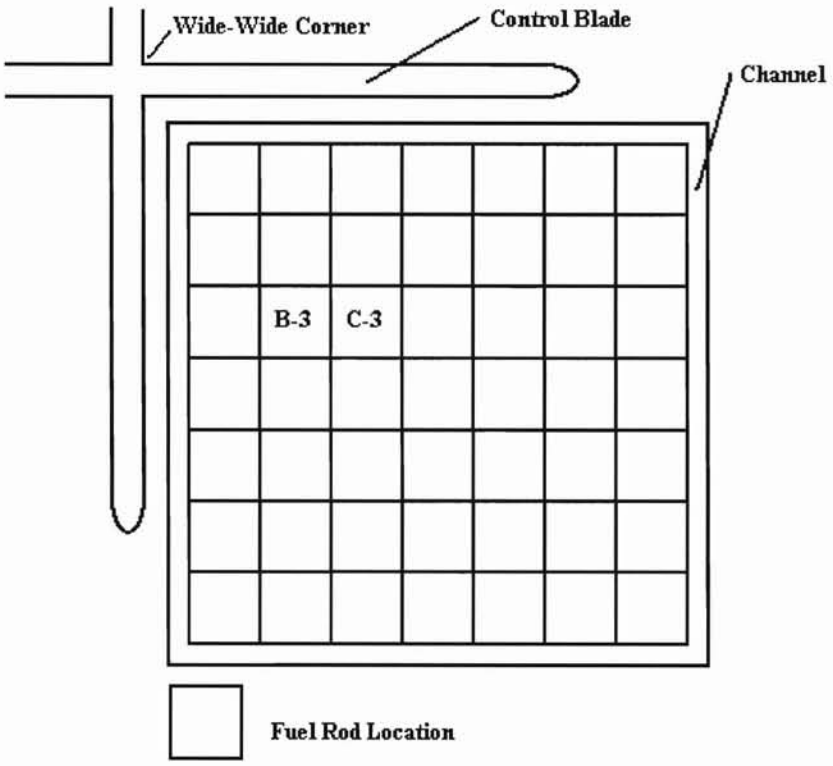

Source: Hermann and DeHart 1998, p. 7

Figure 5-1. Cross Section of the Control Blade and Fuel Assembly for Cooper

5.2.2 Gundremmingen

Gundremmingen used 6x6 fuel assemblies comprising 36 fuel rods as shown in Figure 5-2. Four samples from two Assemblies, B-23 and C-16 were analyzed. B-23, rod A-1 was sampled at 44 and 268 cm; B-3 and C-3 were sampled at 268 cm. Assembly C-16, rod A-1 was sampled at 44 and 268 cm, B-3 and E-5 was sampled at 268 cm. The hot pellet density of Assembly B-23 was 10.068 g/cm^3 and the enrichment was 2.530 weight percent U-235. The hot pellet density of Assembly C-16 was 9.866 g/cm^3 at the same enrichment. The clad material was Zircaloy-2. The fuel burn-up ranged from 14.39 to 17.40 GWd/MWU. The cooling time for B-23 was 2.87 years and for C-16, 2.75 years. The specific power ranged from 14.78 to 25.3 MW/MTU.

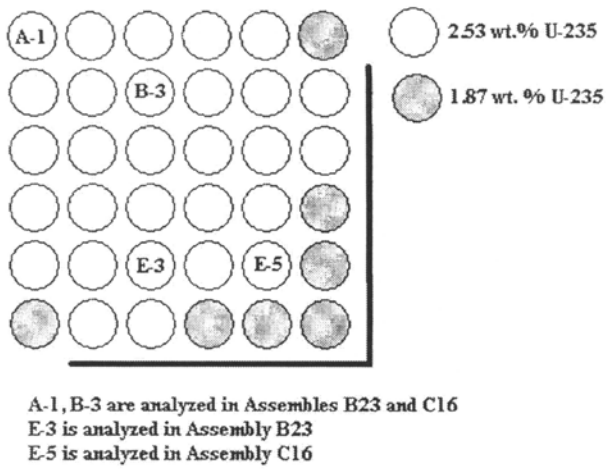

Source: Hermann and DeHart 1998, p. 12

Figure 5-2. Cross Section of Control Blade and Fuel Assembly for Gundremmingen

5.2.3 Japan Power Demonstration Reactor (JPDR)

JPDR used 6x6 fuel assemblies comprising 36 fuel rods as shown Figure 5-3. Rods were pulled from bundles A-14, A-18 and A-20. Samples from nodes 2-12 were taken, details are included with the operating data provided in Table III-2. The hot pellet density of the fuel was 10.13 g/cm^3 and the enrichment was 2.5966 weight percent U-235. The clad material was Zircaloy-2. The fuel burn-up ranged from 2.16 to 7.01 GWd/MTU. The cooling time for A-14 and A-18 was 3.05 years and for A-20, 3.92 years. The specific power ranged from 3.74 to 12.05 MW/MTU.

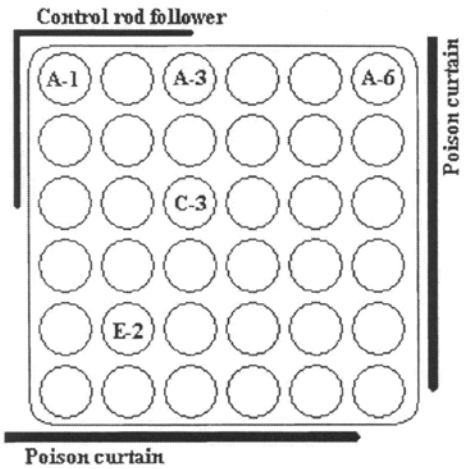

Source: Hermann and DeHart, 1998 p. 16

Figure 5-3. Typical Cross Section of the Control Blade and Fuel Assembly for JPDR

5.2.4 SAS2H Material Specifications

The UO_2 fresh fuel composition is characterized by the fuel density, fuel temperature, and weight percentages of U-234, U-235, U-236, and U-238. Initial UO_2 pellet data includes: pellet diameter, density, pitch, and enrichment as listed in Table 5-5. All of these are important variables to the SAS2H cases.

As noted in Herman and DeHart (1998) moderator densities and temperatures for use in the Cooper and Gundremmingen reactors were selected based on the JPDR measurements and commercial reactor critical (CRC) data for the reactors. Hermann and DeHart (1998) performed multiple Monte Carlo simulations of the Cooper and Gundremmingen reactor cores to estimate the moderator densities.

Burn-up histories of the Cooper, Gundremmingen, and JPDR are provided in Attachments I-III, respectively. The burn-up history of Limerick is provided in *Limerick Unit 1 Radiochemical Assay Comparisons to SAS2H Calculations* (BSC 2003a. pp. 21, 22).

5.2.5 SAS2H Results

Attachments I-III present results of the executed SAS2H runs for Cooper, Gundremmingen, and JPDR. Results of Limerick SAS2H runs are presented in *Limerick Unit 1 Radiochemical Assay Comparisons to SAS2H Calculations* (BSC 2003a, pp. 31, 32). The attachments present the percentage difference between the RCA isotopic concentration and the SAS2H calculated isotopic concentration. Since each reactor data set measured a different list of isotopes, a compilation is provided to assist in evaluating the results of the SAS2H study. For comparison, average weight percents are shown for the set of RCA isotopes.

The isotopes of concern for burnup credit applications are identified in *Principal Isotopes Selection Report* (CRWMS M&O 1998b, p.49). This report maintained all of the isotopes available from RCA data. Isotopes in the list of 29 Principal Isotopes are printed with bold text.

Table 5-4 provides a tabulation of the percent difference between the RCA isotopic concentration and the SAS2H calculated isotopic concentration $\{(k_{SAS2H}/k_{RCA}-1)*100\}$ denoted as $\Delta\%$. Presented is the combined listing of the four reactor data sets including: the number of data points available, the maximum over and under predictions of the percent difference, the average percent difference, and the standard deviation of the percent difference. Due to the extreme range of the isotope concentrations, the average weight percent of each isotope is also provided.

The isotopes of concern for criticality safety purposes have been identified in *Principal Isotope Selection Report* (CRWMS M&O 1998b). This report maintained the available RCA isotope data from Hermann and DeHart (1998) and BSC (2003a). Isotopes in the list of 29 Principal Isotopes are printed in all tables with bold text.

Table 5-4. Statistical Tabulation of SAS2H Results

Z	Element	Isotope	# of Data Points	Upper[a] Δ%	Average Δ%	Lower[b] Δ%	Max Spread[c] Δ%	Standard Deviation[d] of Δ%	Average[e] wt. %
96	*Curium*	Cm-242	24	46%	9%	-24%	37%	0.196	0.00%
		Cm-243	8	5%	-20%	-42%	25%	0.158	0.00%
		Cm-244	32	27%	-14%	-58%	44%	0.211	0.01%
		Cm-245	8	-28%	-46%	-69%	23%	0.142	0.00%
		Cm-243+Cm-244	6	42%	14%	1%	28%	0.156	N/A
95	***Americium***	**Am-241**	30	29%	1%	-23%	27%	0.134	0.03%
		Am-242m	20	88%	5%	-37%	83%	0.315	0.00%
		Am-243	8	40%	21%	-4%	25%	0.139	0.03%
94	***Plutonium***	**Pu-238**	38	46%	-7%	-27%	53%	0.152	0.01%
		Pu-239	38	10%	-4%	-25%	21%	0.085	0.31%
		Pu-240	38	7%	-1%	-11%	10%	0.049	0.13%
		Pu-241	38	17%	-6%	-25%	23%	0.101	0.05%
		Pu-242	38	43%	3%	-17%	40%	0.125	0.03%
93	***Neptunium***	**Np-237**	26	17%	-31%	-90%	59%	0.317	0.05%
92	***Uranium***	**U-234**	30	4%	-1%	-9%	8%	0.034	0.01%
		U-235	38	25%	-5%	-38%	33%	0.116	1.15%
		U-236	38	5%	-1%	-8%	7%	0.026	0.25%
		U-238	30	0%	0%	-1%	1%	0.004	85.87%
64	***Gadolinium***	**Gd-155**	8	-25%	-38%	-68%	30%	0.146	0.00%
63	***Europium***	**Eu-151**	8	42%	16%	-9%	26%	0.171	0.00%
		Eu-153	8	22%	16%	1%	15%	0.071	0.02%
		Eu-154	20	7%	-8%	-32%	24%	0.109	0.00%
		Eu-155	14	-15%	-30%	-44%	15%	0.121	0.00%
62	***Samarium***	**Sm-147**	8	3%	-1%	-4%	5%	0.026	0.02%
		Sm-149	8	34%	-4%	-25%	38%	0.186	0.00%
		Sm-150	8	10%	5%	2%	4%	0.030	0.04%
		Sm-151	8	42%	16%	-5%	25%	0.159	0.00%
		Sm-152	8	48%	42%	34%	8%	0.059	0.01%
60	***Neodymium***	**Nd-143**	24	17%	1%	-6%	16%	0.046	0.04%
		Nd-144	16	0%	0%	-2%	1%	0.007	0.04%
		Nd-145	24	11%	2%	0%	9%	0.031	0.01%
		Nd-146	24	14%	2%	0%	12%	0.034	0.00%
		Nd-148	32	11%	1%	-4%	10%	0.029	0.02%
		Nd-150	24	13%	2%	-2%	11%	0.035	0.00%
58	*Cerium*	Ce-144	12	115%	95%	79%	19%	0.109	0.00%
55	*Cesium*	Cs-134	28	19%	0%	-24%	24%	0.103	0.00%
		Cs-135	6	11%	5%	-6%	12%	0.061	0.04%
		Cs-137	38	17%	3%	-14%	16%	0.060	0.07%
50	*Tin*	Sn-126	6	28%	22%	18%	6%	0.034	0.00%
47	***Silver***	**Ag-109**	8	33%	21%	-7%	28%	0.136	0.01%

Table 5-4. Statistical Tabulation of SAS2H Results

Z	Element	Isotope	# of Data Points	Upper[a] Δ%	Average Δ%	Lower[b] Δ%	Max Spread[c] Δ%	Standard Deviation[d] of Δ%	Average[e] wt. %
45	***Rhodium***	**Rh-103**	8	2%	-5%	-11%	7%	0.048	0.00%
44	***Ruthenium***	**Ru-101**	8	11%	5%	0%	6%	0.036	0.06%
		Ru-106	12	62%	48%	38%	14%	0.084	0.00%
43	***Technetium***	**Tc-99**	14	17%	11%	0%	11%	0.047	0.08%
42	***Molybdenum***	**Mo-95**	8	6%	3%	-1%	4%	0.020	0.11%
38	*Strontium*	Sr-90	6	8%	7%	4%	3%	0.019	0.00%
34	*Selenium*	Se-79	6	-35%	-37%	-39%	2%	0.140	0.00%

Source: Compiled with Limerick data from BSC (2003a, Attachment III); Cooper, Gundremmingen and JPDR results from Attachments I-III.

Notes: [a] "Upper" implies the largest value percent difference for the isotope.
[b] "Lower" implies the smallest value percent difference for the isotope.
[c] Max Spread implies the largest absolute value of a percent difference from the average.
[d] Standard Deviation of the set of percent differences is calculated with Microsoft Excel© function stdev().
[e] Weight percent of the isotopes is calculated from the measured isotopes for each reactor and averaged together.

5.2.6 MCNP Representation of the 44-BWR Flooded Waste Package.

System reactivity differences between the calculated and measured isotopic concentrations were determined with MCNP calculations. The MCNP calculations were performed to calculate the multiplication factor (k_{eff}) that results from using the RCA isotopic concentrations (k_{RCA}) in a flooded 44-BWR waste package. Only the isotopic concentrations were varied to the predicted concentrations from SAS2H (k_{SAS2H}) providing a comparison in terms of Δk_{eff} (k_{SAS2H}-k_{RCA}).

The 44-BWR waste package configuration follows the drawing provided in Attachment IV. The axial nodes from which the samples came from were used to represent fuel assemblies in a flooded waste package configuration. Axially reflective boundary conditions were used for each representation. The general assembly design parameters are presented in Table 5-5.

Table 5-5. Fuel Assembly Data Required for MCNP

Parameter	Cooper	Gundremmingen	JPDR
Fuel Assembly Data			
Lattice	7x7	6x6	6x6
Number of Fuel Rods	49	36	36
Number of rods containing Gd2O3	5	0	0
Channel Tube Material	Zircaloy-4	Zircaloy-4	Zircaloy[a]
Channel Tube Thickness (cm)	0.2	0.15	0.15
Assembly pitch (cm)	15.24	13.098	13.26

Table 5-6. Fuel Assembly Data Required for MCNP (cont.)

Parameter	Cooper	Gundremmingen	JPDR
Fuel Rod Data			
Clad outer diameter (cm)	1.43	1.428	1.412
Clad thickness (cm)	0.188	0.178	0.076
Cladding material	Zircaloy-2	Zircaloy-2	Zircaloy-2
Rod pitch (cm)	1.875	1.78	1.956
Length (cm)*	370.84	330.2	146.67
Fuel Pellet Data			
Diameter (cm)	1.242	1.25	1.26
Pellet Material	UO2	UO2	UO2
Pellet Initial Enrichment	2.939	2.53	2.5966
Pellet Density	9.73	10.068/9.866	10.13

Source: Hermann and Dehart 1998, Cooper, pp.6,8; Gundremmingen, pp.11,13; JPDR, pp.15,17

Note: [a] The specific Zircaloy type was not provided, Zircaloy-4 was used.

The spent fuel isotopes used in the MCNP cases correspond to those from the SAS2H calculations and the measured sample isotopes. Isotopes were extracted from the SAS2H outputs and measured results, and then combined with the initial oxygen mass and renormalized to the total mass in terms of weight percents. Isotopes listed in Table 3-1 were omitted from the MCNP cases for the reasons stated in Assumption 3.3. The values from the SAS2H calculations are given in units of mols, which were converted to units of grams using Equation 1. The MCNP density input used the corresponding fresh fuel density. Each depleted fuel composition in the MCNP input files is shown in Attachment V. The SAS2H output files for each calculation are contained on a compact disc attachment (Attachment XII).

$$\text{Mass}_i = (\text{Mols Isotope}_i) * A_i \qquad \text{(Eq. 1)}$$

where 'i' is the particular isotope and A_i is the atomic mass value (Audi and Wapstra 1995).

The outer barrier of the waste package was represented as SB-575 N06022 as described in Table 5-7. The inner barrier was represented as SA-240 S31600, which is nuclear grade 316 stainless steel (SS) with tightened control on carbon and nitrogen content (ASM International 1987, p. 931; ASME 1998, Section II, SA-240, Table 1) as described in Table 5-8. The fuel basket plates were represented as Neutronit A978 with 1.62 weight percent boron as described in Table 5-9, and the thermal shunts were represented as aluminum 6061 as described in Table 5-10. The basket side and corner guides were represented as Grade 70 A 516 carbon steel as described in Table 5-11. The basket stiffeners were represented as water since they are not solid over the length of the basket. The rod cladding was made of Zircaloy-2 as described in Table 5-12 and the channel tube material is Zircaloy-4 as described in Table 5-13.

The chromium, nickel, and iron elemental weight percents obtained from the references were expanded into their constituent natural isotopic weight percents for use in MCNP. This expansion was performed by: (1) calculating a natural weight fraction of each isotope in the elemental state, and (2) multiplying the elemental weight percent in the material of interest by the natural weight fraction of the isotope in the elemental state to obtain the weight percent of the isotope in the material of interest. This process is described mathematically in Equations 2 and 3. The atomic mass values and atom percent of natural element values for these calculations are from Parrington et al. (1996).

$$\begin{pmatrix}\text{Weight Fraction}\\ \text{of Isotope "i" in the}\\ \text{Natural Element}\end{pmatrix} = \frac{(\text{Atomic Mass of Isotope "i"})(\text{At\% of Isotope "i" in Natural Element})}{\sum_{i=1}^{I}(\text{Atomic Mass of Isotope "i"})(\text{At\% of Isotope "i" in Natural Element})}$$

(Eq. 2)

where 'I' is the total number of isotopes in the natural element

$$\begin{pmatrix}\text{Wt\% of Isotope "i" in}\\ \text{Material Composition}\end{pmatrix} = \begin{pmatrix}\text{Weight Fraction}\\ \text{of Isotope "i" in the}\\ \text{Natural Element}\end{pmatrix}\begin{pmatrix}\text{Reference Wt\% of}\\ \text{Element in Material Composition}\end{pmatrix}$$

(Eq. 3)

Table 5-7. Material Specifications for SB-575 N06022

Element/Isotope	ZAID	Wt%	Element/Isotope	ZAID	Wt%
C-nat	6000.50c	0.0150	^{59}Co	27059.50c	2.5000
^{55}Mn	25055.50c	0.5000	^{182}W	74182.55c	0.7877
Si-nat	14000.50c	0.0800	^{183}W	74183.55c	0.4278
^{50}Cr	24050.60c	0.8879	^{184}W	74184.55c	0.9209
^{52}Cr	24052.60c	17.7863	^{186}W	74186.55c	0.8636
^{53}Cr	24053.60c	2.0554	V	23000.50c	0.3500
^{54}Cr	24054.60c	0.5202	^{54}Fe	26054.60c	0.2260
^{58}Ni	28058.60c	36.8024	^{56}Fe	26056.60c	3.6759
^{60}Ni	28060.60c	14.6621	^{57}Fe	26057.60c	0.0865
^{61}Ni	28061.60c	0.6481	^{58}Fe	26058.60c	0.0116
^{62}Ni	28062.60c	2.0975	^{32}S	16032.50c	0.0200
^{64}Ni	28064.60c	0.5547	^{31}P	15031.50c	0.0200
Mo-nat	42000.50c	13.5000	Density = 8.69 g/cm^3		

Source: DTN: MO0003RIB00071.000
Source: ASM International 1987, p. 931; and ASME 1998, Section II, SA-240, Table 1

Table 5-8. Material Specifications for SS316NG

Element/Isotope	ZAID	Wt%	Element/Isotope	ZAID	Wt%
C-nat	6000.50c	0.0200	^{54}Fe	26054.60c	3.6911
^{14}N	7014.50c	0.0800	^{56}Fe	26056.60c	60.0322
Si-nat	14000.50c	1.0000	^{57}Fe	26057.60c	1.4119
^{31}P	15031.50c	0.0450	^{58}Fe	26058.60c	0.1897
^{32}S	16032.50c	0.0300	^{58}Ni	28058.60c	8.0641
^{50}Cr	24050.60c	0.7103	^{60}Ni	28060.60c	3.2127
^{52}Cr	24052.60c	14.2291	^{61}Ni	28061.60c	0.1420
^{53}Cr	24053.60c	1.6443	^{62}Ni	28062.60c	0.4596
^{54}Cr	24054.60c	0.4162	^{64}Ni	28064.60c	0.1216
^{55}Mn	25055.50c	2.0000	Mo-nat	42000.50c	2.5000
Density = 7.98 g/cm^3					

Source: ASM International (1987), p. 931, and ASME 1998, Section II, SA-240, Table 1.

Table 5-9. Material Specifications for Neutronit A978 with 1.62 weight percent Boron

Element/Isotope	ZAID	Wt%	Element/Isotope	ZAID	Wt%
^{10}B	5010.50c	0.2986	^{57}Fe	26057.60c	1.3928
^{11}B	5011.56c	1.3214	^{58}Fe	26058.60c	0.1872
C-nat	6000.50c	0.0400	^{59}Co	27059.50c	0.2000
^{50}Cr	24050.60c	0.7730	^{58}Ni	28058.60c	8.7361
^{52}Cr	24052.60c	15.4846	^{60}Ni	28060.60c	3.4805
^{53}Cr	24053.60c	1.7894	^{61}Ni	28061.60c	0.1539
^{54}Cr	24054.60c	0.4529	^{62}Ni	28062.60c	0.4979
^{54}Fe	26054.60c	3.6411	^{64}Ni	28064.60c	0.1317
^{56}Fe	26056.60c	59.2189	Mo-nat	42000.50c	2.2000
Density = 7.76 g/cm^3					

Source: DTN: MO0109RIB00049.001.

Table 5-10. Material Specifications for Al 6061

Element/Isotope	ZAID	Wt%	Element/Isotope	ZAID	Wt%
Si-nat	14000.50c	0.6000	Mg-nat	12000.50c	1.0000
^{54}Fe	26054.60c	0.0396	^{50}Cr	24050.60c	0.0081
^{56}Fe	26056.60c	0.6433	^{52}Cr	24052.60c	0.1632
^{57}Fe	26057.60c	0.0151	^{53}Cr	24053.60c	0.0189
^{58}Fe	26058.60c	0.0020	^{54}Cr	24054.60c	0.0048
^{63}Cu	29063.60c	0.1884	Ti-nat	22000.50c	0.1500
^{65}Cu	29065.60c	0.0866	^{27}Al	13027.50c	96.9300
^{55}Mn	25055.50c	0.1500	Density = 2.7065 g/cm^3		

Source: MO9906RIB00048.000

NOTE: Zn cross-section data unavailable, therefore it was substituted as ^{27}Al (See assumption 3.2).

Table 5-11. Material Specifications for Grade 70 A516 Carbon Steel

Element/Isotope	ZAID	Wt%[a]	Element/Isotope	ZAID	Wt%[a]
C-nat	6000.50c	0.2700	^{54}Fe	26054.60c	5.5558
^{55}Mn	25055.50c	1.0450	^{56}Fe	26056.60c	90.3584
^{31}P	15031.50c	0.0350	^{57}Fe	26057.60c	2.1252
^{32}S	16032.50c	0.0350	^{58}Fe	26058.60c	0.2856
Si-nat	14000.50c	0.2900	Density[b] = 7.850 g/cm^3		

Sources: [a] ASTM A 516/A 516M-01, Table 1
[b] ASTM A 20/A20M-99a, p. 9

Table 5-12. Material Specifications for Zircaloy-2

Element/Isotope	ZAID	Wt%[a]	Element/Isotope	ZAID	Wt%[a]
^{16}O	6000.50c	0.1250	^{58}Fe	26058.60c	0.0004
^{50}Cr	24050.60c	0.0042	^{58}Ni	28058.60c	0.0370
^{52}Cr	24052.60c	0.0837	^{60}Ni	28060.60c	0.0147
^{53}Cr	24053.60c	0.0097	^{61}Ni	28061.60c	0.0007
^{54}Cr	24054.60c	0.0024	^{62}Ni	28062.60c	0.0021
^{54}Fe	26054.60c	0.0076	^{64}Ni	28064.60c	0.0006
^{56}Fe	26056.60c	0.1241	Sn-nat	50000.35c	1.4500
^{57}Fe	26057.60c	0.0029	Zr-nat	40000.60c	98.1350
Density = 6.55 g/cm^3					

Source: DTN: MO9906RIB00048.000

Table 5-13. Material Specifications for Zircaloy-4

Element/Isotope	ZAID	Wt%	Element/Isotope	ZAID	Wt%
^{50}Cr	24050.60c	0.0042	^{57}Fe	26057.60c	0.0045
^{52}Cr	24052.60c	0.0837	^{58}Fe	26058.60c	0.0006
^{53}Cr	24053.60c	0.0097	^{16}O	8016.50c	0.1250
^{54}Cr	24054.60c	0.0024	Zr-nat	40000.60c	98.1150
^{54}Fe	26054.60c	0.0119	Sn-nat	50000.35c	1.4500
^{56}Fe	26056.60c	0.1930	Density = 6.56 g/cm^3		

Source: DTN: MO9906RIB00048.000

5.2.7 MCNP Input Conversions

The conversion of the isotopic concentrations from RCA and SAS2H output files to MCNP input files require long tables to list the isotopes. Most of the isotopes from RCA were provided in milligram for gram measurements, but a few were provided in radiation units of Curie per gram. This required a conversion using the specific activity of the isotope.

$$Specific\ Activity\ (SA) = \frac{N_a * Ln(2)}{At.Wt. * T_{1/2}}$$

(Eq. 4)

where N_a = 6.022E+23 (*Avagadro's Number),* (Parrington et al. 1996, p. 59)
$Ln(2)$ = 0.693147181 (*Natural Logarithm*)
At. Wt. = Atomic Weight of the Isotope
$T_{1/2}$ = Half-life of the Isotope in seconds
SA is in Designations per Second (DPS).

To convert specific activity from DPS to Curies divide by the factor: 3.70E+10 DPS/Ci. (Parrington et al. 1996, p. 58)

Tables in the attachments utilize Equation 4 to convert isotopes provided in radiation units to concentration units. Once all of the isotopic concentrations were in milligram per gram units, they were scaled to MCNP inputs. To accomplish this the initial fuel mass and oxygen content are maintained.

The initial weight percentage of oxygen in the fuel can be found in Table 5-14.

To calculate the initial weight percent of oxygen in the UO_2 fuel, basic calculations presented in Equation 5 were utilized.

U-235 wt. = At. Wt. 235 * (wt. % U-235)

U-238 wt. = At. Wt. 238 * (1- wt. % U-235)

O wt. = 2 * At. Wt. O

$$\text{Wt. \% O} = 100 * \frac{Wt.O}{\Sigma_i Wt._i}$$

(Eq. 5)

Additionally, the Cooper, Gundremmingen, and JPDR reactors specified minor uranium isotopes of U-234 and U-236; Equation 5 was expanded and showed less than a 0.0005% variation in the weight percent Oxygen reported in Table 5-14.

Table 5-14. Initial Oxygen Content of UO_2 Fuel

Assay	U-235 wt.	U-238 wt.	Total U wt.	O_2 wt.	UO_2 wt.	wt. % O
3.950	9.28424	228.64778	237.93202	31.99881	269.93083	11.85%
3.600	8.46158	229.48096	237.94254	31.99881	269.94135	11.85%
2.939	6.90794	231.05448	237.96242	31.99881	269.96123	11.85%
2.5966	6.10174	231.87099	237.97273	31.99881	269.97154	11.85%
2.530	5.94661	232.02810	237.97471	31.99881	269.97352	11.85%

Source: Initial enrichments from (Hermann and DeHart 1998, pp. 8,13, 17)
Limerick Unit 1 Initial enrichment from (BSC 2003a, p. 11)

Equation 6 was derived to project the oxygen concentration in the SNF based on the initial oxygen concentration.

$$C(O) = \frac{wt.\%O_{\mathrm{i}} * \Sigma_i C_i}{1 - wt.\%O_{\mathrm{i}}}$$

(Eq. 6)

where $C(O)$ = Projected concentration of oxygen
wt. $\%O_i$ = Initial oxygen Weight Percent in UO_2 pellet
$\Sigma_i C_i$ = Summation of all SAS2H projected concentrations of isotopes of interest

With a projection of the oxygen concentration and the sum of the concentrations of each isotope of interest from SAS2H, the normalized MCNP inputs are computed with Equation 7.

$$\text{MCNP Input}_{\mathrm{i}} = 100 * \left(\frac{C_i}{C_t}\right)$$

(Eq. 7)

where MCNP Input_i = The MCNP input value for each individual isotope
C_i = SAS2H projected concentration of the individual isotope
C_t = The sum of all the SAS2H projected concentrations plus the projected concentration of oxygen.

Attachment V provides the MCNP conversion tables for the Cooper, Gundremmingen, and JPDR reactor data sets.

5.2.8 MCNP Results

Attachment VI provides results for all of the MCNP runs with the following information: burn-up values, standard deviations (σ)s, Average Energy Neutron Causing Fission (AENCF) and the resulting Δk_{eff} equal to (k_{SAS2H}-k_{RCA}). In addition, the square root of the summed squares (RS) of standard deviations are provided, calculated from Equation 8.

The square root of the summed squares of the sigmas (σ)s generated by the MCNP code is found by:

$$RS(\sigma) = \sqrt{(\sigma^2_{RCA} + \sigma^2_{SAS2H})}$$

(Eq. 8)

Table 5-15 provides a summary of the MCNP runs and the standard deviations of the Δk_{eff}s which were calculated with Equation 9.

$$St.\ Deviation = sqrt\left(\frac{\sum_{i=1}^{N}(k_{effi} - \overline{k_{eff}})^2}{(N-1)}\right)$$

(Eq. 9)

Source: Walpole et al. (1998, p. 205 Definition 8.9 & 8.10)

where N = Number of data terms in the set
i = index, so each term in the set is used

$$\overline{k_{eff}} = Average\ k_{eff}$$

Table 5-15. Summary of MCNP Results

BWR	# of Data points	Average Δk_{eff}	Standard Deviation of Δk_{eff}s	Minimum Δk_{eff}	Maximum Δk_{eff}
Limerick	8	-0.03423	3.17%	-0.06713	0.02053
Cooper	6	-0.00474	1.12%	-0.01865	0.00811
Gundremmingen	8	-0.00601	0.93%	-0.02147	0.00771
JPDR	16	-0.00291	0.31%	-0.00766	0.00502

5.2.9 Bias Determination

Analysis of the resulting MCNP runs indicates that there is a significant difference between the three older style BWRs: Cooper, Gundremmingen, and JPDR and the modern BWR represented by the Limerick reactor.

Table 5-15 demonstrated the maximum standard deviation of three simple reactor Δk_{eff}s to be about 1 percent. However, the Limerick reactor has a Δk_{eff} standard deviation over 3%.

The difficulty for the SAS2H one-dimensional code to predict modern BWR isotopic concentrations as accurately as the older BWRs becomes apparent when looking at the changes made in the BWR fuel design. The changes include partial length rods, extensive use of burnable poisons, higher initial enrichments, and smaller pellet diameters among other changes. All of the changes were introduced to extend core cycle time and maximize fuel utilization. The maximum burn-up for the simple cores is about 34 (GWd/MTU), while the Limerick reactor fuel has been irradiated up to 65.5 (GWd/MTU).

Such behavior is expected, as the operation of a BWR is significantly more complex than that of a PWR plant, and in general the design of a BWR has a more heterogeneous configuration than that of a PWR (Hermann and DeHart 1998, p xi). The Path B representation of reactor cores is an approximation that becomes less effective the more localized or heterogeneous the core. All of the above changes in BWR fuel design tend to increase the cores heterogeneity.

Based on these differences in reactor fuel designs it is appropriate to split out the simple BWRs for individual analysis. Both a general BWR (all available reactor data) and a simple BWR case (without the Limerick data) are presented.

The bias and uncertainty were evaluated using the methods described below, which come from the lower bound tolerance limit calculation in *Disposal Criticality Analysis Methodology Topical Report* (YMP 2003, section 3.5.3.2.6).

5.2.9.1 Bias Determination for the General BWR Case

To test for a trend in the bias based on burn-up, a variation of the Student's t-test along with the slope test was used to determine if a particular trend is considered statistically significant.

The linear regression fitted equation is in the form y(x) = a + bx. The slope test requires calculating the test statistic "*T*" as follows in Equation 10 along with the statistical parameters in Equations 11 and 12.

$$T = b\sqrt{\frac{(n-2)S_{xx}}{SS_R}}$$

(Eq. 10)

$$S_{xx} = \sum_{i=1}^{n}(x_i - \bar{x})^2$$

(Eq. 11)

and

$$SS_R = \sum_{i=1}^{n}(y_i - a - bx_i)^2$$

(Eq. 12)

where

a and *b* come from the fitted linear regression, Equation 13; evaluated in Equation 14.

The test statistic is compared to the Student's t-distribution with 95% confidence and n-2 degrees of freedom. Given a null hypothesis of "no statistically significant trend exists (slope is zero)", the hypothesis would be accepted if $|T| < t_{\alpha/2,n-2}$, and rejected otherwise. Unless the data is exceptional, the linear regression results will have a non-zero slope. By only accepting trends that the data supports with 95% confidence, trends due to the randomness of the data are eliminated.

Attachment VII provides the summed totals required to evaluate Equations 10 - 13.

The test demonstrates that there is a statistically significant trend in the Δk_{eff}s using burn-up values as the independent variable.

The bias and uncertainty is generated using the regression method presented in *Guide for Validation of Nuclear Criticality Safety Calculational Methodology* (Dean and Tayloe 2001, section 2.4.2). The bias (β) was determined as a functional relationship with the burn-up value, in units of (GWd/MTU), as the independent variable.

The bias can then be found using a fitted line to the 38 data points.

The equations used to produce a weighted fit of a straight line to a set of data are given in Equation 13.

$$\beta_G(x) = \Delta k_{fit}(x) = a + b * x$$

(Eq. 13)

where $$a = \left(\frac{1}{\Delta}\right)\left(\Sigma\sum_{i=1}^{n}\frac{X_i^2}{\sigma_i^2} * \Sigma\sum_{i=1}^{n}\frac{\Delta k_{effi}}{\sigma_i^2} - \Sigma\sum_{i=1}^{n}\frac{X_i}{\sigma_i^2} * \Sigma\sum_{i=1}^{n}\frac{X_i \Delta k_{effi}}{\sigma_i^2}\right)$$

$$b = \left(\frac{1}{\Delta}\right)\left(\sum_{i=1}^{n}\frac{1}{\sigma_i^2} * \sum_{i=1}^{n}\frac{X_i \Delta k_{effi}}{\sigma_i^2} - \sum_{i=1}^{n}\frac{X_i}{\sigma_i^2} * \sum_{i=1}^{n}\frac{\Delta k_{effi}}{\sigma_i^2}\right)$$

$$\Delta = \sum_{i=1}^{n}\frac{1}{\sigma_i^2} * \sum_{i=1}^{n}\frac{X_i^2}{\sigma_i^2} - \left(\sum_{i=1}^{n}\frac{X_i}{\sigma_i^2}\right)^2$$

i = index, implying that all of the terms in the data set are used.

Attachment VII show the numerical values used in the above equations, resulting in the bias relationship of:

For burn-ups from 2.16 to 65.5 (GWd/MTU):

$$\beta_G(x) = -4.813E\text{-}04 \ * \text{Burn-up} + 1.430E\text{-}03$$

(Eq. 14)

5.2.9.2 Bias Determination for the Simple BWR Case

Attachment VII provides the summed totals required to evaluate Equations 10-13 for the simple BWR case. The test demonstrates that there is not a statistically significant trend in the Δk_{eff} data with burn-up values. Without a trend in the Δk_{eff} data, the average is found to be: –3.282E-3. For the simple BWR case the bias relationship can be expressed as:

For burn-ups from 2.16 to 34 (GWd/MTU):

$$\beta_S = -3.282E\text{-}3$$

(Eq. 15)

5.2.10 Uncertainty Determination

The tolerance limits are derived by methods presented in *Disposal Criticality Analysis Methodology Topical Report* (YMP 2003), section 3.5.3.2.6 distinguishes methods of determining the tolerance limits based on statistically significant trends. If a trend, based on a predicting parameter (in this case burnup value) can be confirmed then the Lower Uniform Tolerance Band (LUTB) method is used. If no trend is identified, the data is tested for a normal distribution. Passing the normal distribution test allows use of the Normal Distribution Tolerance Limit (NDTL) and failing the test requires the use of the Distribution Free Tolerance Limit.

The general case has been shown to have a statistically significant trend and does not require a normality test. The lower bound tolerance limit can be found with the LUTB method per (YMP 2003, section 3.5.3.2.6). The simple case does not have a significant trend and requires a test for normality.

For cases with fewer than 50 data points the Shapiro-Wilk test can be used to test if the Δk_{eff} values are normally distributed about the mean Δk_{eff}. The Δk_{eff}s are tested with the standard Shapiro-Wilk test for normality.

Attachment VIII utilizes the Shapiro-Wilk test for normality (Dean and Tayloe 2001, Section 2.4.3). The variables for the normality test are provided in Attachment VIII. The test criteria are established in terms of W_t given in Equation 16.

$$W_t = \frac{Y^2}{S^2}$$

(Eq. 16)

where $Y = \Sigma_{j=1}^{v} \alpha_j \left(y_{(n+1-j)} - y_j \right)$

$$S^2 = \Sigma\left(\Delta k_{eff} i - \overline{\Delta k_{eff}}\right)^2$$

α_j = coefficients

Dean and Tayloe (2001), Table A.2 for 30 points)

$y_i = \Delta k_{eff}$ for data point "*i*".

n = Number of Δk_{eff} data points

v = n/2 for even n, (n-1)/2 for odd n

With the passing criteria defined as:

$$W_n < W_t (\Delta k_{eff})_n$$

where

W_n = The test Statistic for a given number of data points (n)

$W_t(\Delta k_{eff})_n$ = The evaluated statistic for a given number (n) of Δk_{eff} points.

Per Table A.5 of *Guide for Validation of Nuclear Criticality Safety Calculational Methodology* (Dean and Tayloe 2001) the passing criteria for 30 data points is:

$$W_{30} = 0.927$$

Attachment VIII evaluates $W_t(\Delta k_{eff})_{30} = 0.969$, demonstrating that $W_{30} < W_t(\Delta k_{eff})_{30}$; therefore, the Δk_{eff}s from the simple reactors are normally distributed.

5.2.10.1 Lower Uniform Tolerance Band for General BWR Case

The sum of the bias and uncertainty is defined as listed in Equation 17.

$$\text{Sum of Bias and Uncertainty} = \beta_G(x) - \Delta\beta_G(x) \quad \text{(Eq. 17)}$$

where

$\beta_G(x)$ = Bias as a function of Burnup, Equation 14.

$\Delta\beta_G(x)$ = The uncertainty of $\beta_G(x)$ based on the statistical scatter of the Δk_{eff} values, accounting for the confidence limit, the proportion of the population covered, and the size of the data set.

Source: (YMP 2003, section 3.5.3.2.7)

The technique to determine $\Delta\beta_G(x)$ is found in Lichtenwalter et al. (1997, section 4.1. 2), method 2, as shown in Equation 18.

$$\Delta\beta_G(x) = C_{\alpha/P} * S_P \quad \text{(Eq. 18)}$$

where

$C_{\alpha/P}$ = Term that provides a band with probability (P) and confidence (α) that an additional calculation of Δk_{eff} will lie within the band, Equation 19

S_P = Pooled Standard Deviation, Equation 25

$$C_{\alpha/P} = C^* + z_P\sqrt{\frac{(n-2)}{X^2}} \quad \text{(Eq. 19)}$$

where

n = The number of Δk_{eff} data points available (n-2=36)

z_P = The Student-t distribution statistic for 0.95% Confidence (1-0.95) and (n-1) degrees of freedom (obtained from Microsoft Excel© function "TINV(0.05,37)"= 2.026)

X = The Chi-Squared distribution statistic for 0.95% Confidence and (n-2) degrees of freedom (obtained from Microsoft Excel © function "CHIINV(0.05,36)"= 23.2686)

The LUTB requires the range of Δk_{eff} be set from a = 2.1583 to b=65.54. C* can then be evaluated with a number of definitions:

$$g = \sqrt{\frac{1}{n} + \frac{(a-\bar{x})^2}{\sum_{i=1}^{n}\left(x_i - \bar{x}\right)^2}}$$

(Eq. 20)

$$h = \sqrt{\frac{1}{n} + \frac{(b-\bar{x})^2}{\sum_{i=1}^{n}\left(x_i - \bar{x}\right)^2}}$$

(Eq. 21)

$$\rho = \frac{1}{gh} * \left\{ \frac{1}{n} + \frac{(a-\bar{x})^2 (b-\bar{x})^2}{\sum_{i=1}^{n}\left(x_i - \bar{x}\right)^2} \right\}$$

(Eq. 22)

$$A = g/h$$

(Eq. 23)

The values of A = 0.6141, ρ = -0.34491 and (n-2) = 36 are found in Attachment IX and are required to find the value "D" from Table 3 of Bowden and Graybill (1963). Attachment IX discusses the referenced table and the required interpolations to find the "D" value, as shown in Table 5-16

Table 5-16 Interpolations for D Value

(n-2) / A	0.6	0.614	0.7
30	2.88[a]	2.83	2.53[a]
36	2.86	2.81	2.52
40	2.85[a]	2.80	2.51[a]

Source: Bowden and Graybill (1963, Table 3)

Notes: [a] Published values

Since A is within the range of $0.5 \leq A \leq 1.5$, Equation 24 can be used:

$$C^* = D * g$$

(Eq. 24)

C* is evaluated to 0.6563 in Attachment IX. From Equation 19, $C_{\alpha/P}$ can be evaluated to: 3.1744

The standard deviation is obtained from the pooled variance.

$$S_p = \sqrt{S_{k(x)}^2 + S_w^2}$$

(Eq. 25)

the variance of the regression fit is given by:

$$S_{k(x)}^2 = \frac{1}{(n-2)}\left[\sum_{i=1,n}(\Delta k_{effi_i} - \overline{\Delta k_{eff}})^2 - \frac{\left\{\sum_{i=1,n}(x_i - \bar{x})(\Delta k_{eff_i} - \overline{\Delta k_{eff}})\right\}^2}{\sum_{i=1,n}(x_i - \bar{x})^2}\right]$$

(Eq. 26)

the within variance (or mean-square error) is given by:

$$S_w^2 = \frac{1}{n}\sum_{i=1,n} RS(\sigma)_i^2$$

(Eq. 27)

Attachment IX evaluates the summed parameters and solves Sp = 1.7393E-02, $\Delta\beta_G(x)$ was evaluated to be the product of 3.1766* 1.7393E-02 = 0.05525.

Sum of Bias and Uncertainty = $\beta_G(x)$ - 0.05525

(Eq. 28)

5.2.10.2 Normal Distribution Tolerance Limit for the Simple BWR Case

Without the Limerick data, the remaining 30 data points are normally distributed as shown in Attachment VIII. For a one-sided tolerance factor, the technique shown in Equation 29 is used to determine the bias and uncertainty.

Sum of Bias and Uncertainty = $\overline{\Delta k_{eff}} - K_b * \sqrt{\sigma_{\Delta k_{eff}}^2 - \sigma_{MCNP}^2}$

(Eq. 29)

where

$\overline{\Delta k_{eff}}$ = Average (mean) value of Δkeff

Source: (YMP 2003, section 3.5.3.2.6, Definition of $k_C(x)$)

K_b = Multiplier for one-sided Tolerance Limit

For 95/95 Tolerance limit with 30 data points, K_b = 2.220

Source: (Natrella 1963, Table A-7)

The σ's are found by Equations 30 and 31.

$$\sigma_{\Delta k_{eff}} = \frac{N\sum_{i=1}^{30} \Delta k_{eff}{}^{2} - \left(\sum_{i=1}^{30} \Delta k_{eff}\right)^{2}}{N(N-1)}$$

(Eq. 30)

$$\sigma_{MCNP} = \sqrt{\frac{\sum_{i=1}^{N} \sigma_i}{N}}$$

(Eq. 31)

Attachment IX evaluates the required summed values and Equations 29 - 31.

From Attachment IX for the simple BWR case for a 95/95 tolerance limit, the sum of the bias and uncertainty determined by the coupled code is shown in Equation 32.

Sum of Bias and Uncertainty = –0.021

(Eq. 32)

6 RESULTS

The bias and uncertainty were evaluated using the method described in *the Disposal Criticality Analysis Methodology Topical Report* (YMP 2003, Section 3.5.3). The overall isotopic bias and uncertainty was quantified by calculating Δk_{eff} between the measured and calculated compositions for a given set of isotopics.

For the determination of uncertainty it should be noted that radiochemical assay samples are generally taken from a single fuel pellet in a burned fuel assembly. This fuel pellet may not be representative of the many fuel pellets contained in the fuel assembly. Thus, the one-dimensional neutron transport-depletion model will contain additional uncertainty because of the limited capability to represent individual fuel pellets and the neutron spectrum associated with fuel pellet samples. Other sources of uncertainty in the evaluation include the calculational method, the experimental data, and lack of detailed operating history information. The sources of the uncertainty are cumulatively observed in the variability of the Δk_{eff} results obtained for the different samples. In order to subsume this uncertainty, a 95/95 tolerance limit (95% confidence that 95% of the population is represented) was used in calculating the bias and uncertainty.

Two sets of experiments were evaluated – a general set that consists of all BWR fuel samples (general), and a smaller subset (simple) that consists of older fuel assembly designs that contain less heterogeneity in the overall assembly design.

The general case set was determined to have a trend with burnup; therefore, the bias and uncertainty was determined as a function of burn-up. For the simple case, a trend was not identified; therefore, the bias and uncertainty was determined using the NDTL method as described in *Disposal Criticality Analysis Methodology Topical Report* (YMP 2003, Section 3.5.3.2.6). Bias and uncertainty values were calculated for both sets of isotopics as presented in Table 6-1. Illustrations are depicted in Figure 6-1 and Figure 6-2. It should be noted that this bias and uncertainty in terms of Δk_{eff} are only applicable to the intact waste package configuration.

Table 6-1 Summary of Results

Isotope Set	Average Δk_{eff}	Bias and Uncertainty	Range (GWd/MTU)
General	-0.0098	-4.813e-4*BU-0.0366	2.16 to 65.5
Simple	-0.0033	-0.021	2.16 to 34

The outputs are reasonable compared to the inputs and the results are suitable for the intended use. The SAS2H and MCNP input and output files used in this evaluation are contained on an attached compact disc, Attachment XII, to this calculation file as listed in Attachment XI.

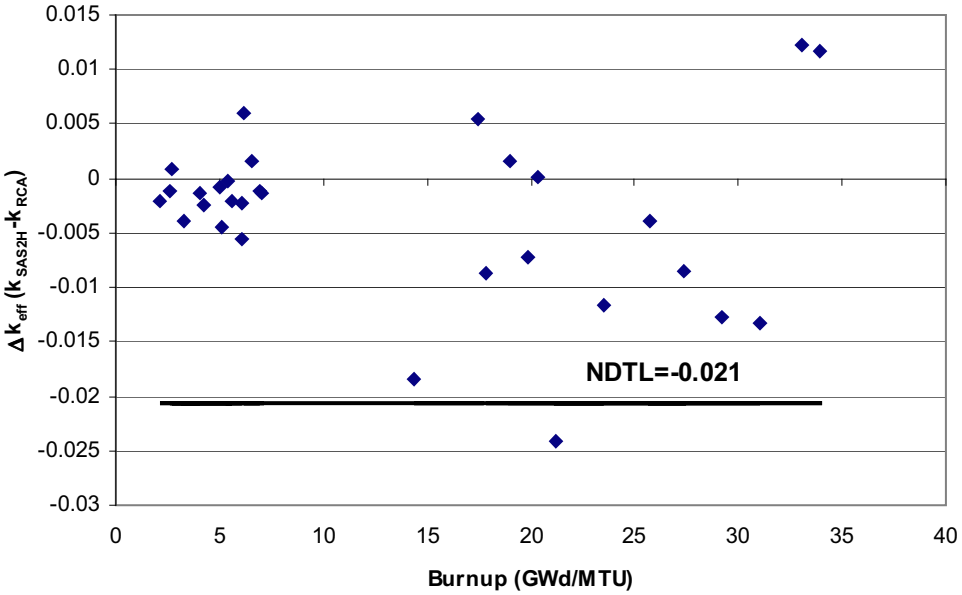

Figure 6-1. Simple BWR Lower Limit Plot

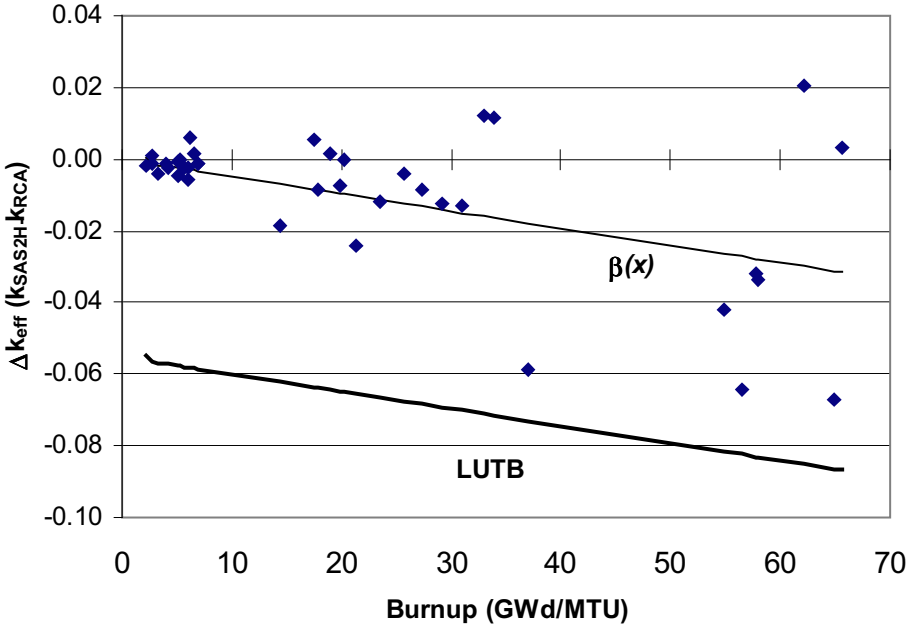

Figure 6-2. General BWR Lower Limit Plot

The bias and uncertainty values were presented in Table 6-1. Table 6-1 shows that on average, the calculated SAS2H isotopics cause MCNP to underpredict k_{eff} relative to the RCA measured isotopics. For the simple case it appears to underpredict by about 2% and for the general case it appears to underpredict from about 5.5% to 8.5% over the given burnup range.

7 REFERENCES

7.1 DOCUMENTS CITED

ASM International. 1987. *Corrosion.* Volume 13 of *Metals Handbook.* 9th Edition. Metals Park, Ohio: ASM International. TIC: 209807.

ASME (American Society of Mechanical Engineers) 1998. *1998 ASME Boiler and Pressure Vessel Code.* 1998 Edition with 1999 and 2000 Addenda. New York, New York: American Society of Mechanical Engineers. TIC: 247429.

Audi, G. and Wapstra, A.H. 1995. *Atomic Mass Adjustment, Mass List for Analysis.* Upton, New York: Brookhaven National Laboratory, National Nuclear Data Center. TIC: 242718.

Bowden, D.C. and Graybill, F.A. 1966. "Confidence Bands of Uniform and Proportional Width for Linear Models." *Journal of the American Statistical Association, 61,* (313), 182-198. Washington, D.C.: American Statistical Association. TIC: 238570.

Briesmeister, J.F., ed. 1997. *MCNP-A General Monte Carlo N-Particle Transport Code.* LA-12625-M, Version 4B. Los Alamos, New Mexico: Los Alamos National Laboratory. ACC: MOL.19980624.0328.

BSC (Bechtel SAIC Company) 2001. *Repository Design, Waste Package Project 44-BWR Waste Package, Sheet 1 of 3, Sheet 2 of 3, and Sheet 3 of 3.* DWG-UDC-ME-000002 REV A. Las Vegas, Nevada: Bechtel SAIC Company. ACC: MOL.20020102.0175.

BSC (Bechtel SAIC Company) 2003a. *Limerick Unit 1 Radiochemical Assay Comparisons to SAS2H Calculations.* CAL-DSU-NU-000002 REV 00. Las Vegas, Nevada: Bechtel SAIC Company. DOC.20030825.0001.

BSC (Bechtel SAIC Company) 2003b. *Technical Work Plan for: Risk and Criticality Department.* TWP-EBS-MD-000014 REV 01. Las Vegas, Nevada: Bechtel SAIC Company. ACC: DOC.20031002.0003.

BSC (Bechtel SAIC Company) 2003c. *Design and Engineering, D&E/PA/C IED Typical Waste Package Components Assembly 1 of 9.* 800-IED-WIS0-00201-000-00C. Las Vegas, Nevada: Bechtel SAIC Company. ACC: ENG.20030917.0002.

CRWMS M&O 1998b. *Principal Isotope Selection Report.* B00000000-01717-5705-00104 REV 00. Las Vegas, Nevada: CRWMS M&O. ACC: MOL.19980827.0187.

CRWMS M&O 1998c. *Software Qualification Report for MCNP Version 4B2, A General Monte Carlo N-Particle Transport Code.* CSCI: 3003-V4B2LV. DI: 30033-2003, Rev. 01. Las Vegas, Nevada: CRWMS M&O. ACC: MOL.19980622.0637.

CRWMS M&O 2000a. *Users Manual for SCALE-4.4A.* 10129-UM-4.4A-00. Las Vegas, Nevada: CRWMS M&O. ACC: MOL.20001130.0136.

CRWMS M&O 2000b. *Validation Test Report (VTR) for SCALE-4.4A.* 10129-VTR-4.4A-00. Las Vegas, Nevada: CRWMS M&O. ACC: MOL.20001130.0139.

Dean, J.C. and Tayloe, R.W., Jr. 2001. *Guide for Validation of Nuclear Criticality Safety Calculational Methodology.* NUREG/CR-6698. Washington, D.C.: U.S. Nuclear Regulatory Commission. TIC: 254004.

DOE (U.S. Department of Energy) 2003. *Quality Assurance Requirements and Description.* DOE/RW-0333P, Rev. 13. Washington, D.C.: U.S. Department of Energy, Office of Civilian Radioactive Waste Management. ACC: DOC.20030422.0003.

Hermann, O.W. and DeHart, M.D. 1998. *Validation of SCALE (SAS2H) Isotopic Predictions for BWR Spent Fuel.* ORNL/TM-13315. Oak Ridge, Tennessee: Oak Ridge National Laboratory. TIC: 245042.

Lichtenwalter, J.J.; Bowman, S.M.; DeHart, M.D.; and Hopper, C.M. 1997. *Criticality Benchmark Guide for Light-Water-Reactor Fuel in Transportation and Storage Packages.* NUREG/CR-6361. Washington, D.C.: U.S. Nuclear Regulatory Commission. TIC: 233099.

Natrella, M.G. 1963. *Experimental Statistics.* National Bureau of Standards Handbook 91. Washington, D.C.: U.S. Department of Commerce, National Bureau of Standards. TIC: 245911.

Parrington, J.R.; Knox, H.D.; Breneman, S.L.; Baum, E.M.; and Feiner, F. 1996. *Nuclides and Isotopes, Chart of the Nuclides.* 15th Edition. San Jose, California: General Electric Company and KAPL, Inc. TIC: 233705.

Walpole, R.E.; Myers, R.H.; and Myers, S.L. 1998. *Probability and Statistics for Engineers and Scientists.* 6th Edition. Upper Saddle River, New Jersey: Prentice Hall. TIC: 242020.

YMP (Yucca Mountain Site Characterization Project) 2003. *Disposal Criticality Analysis Methodology Topical Report.* YMP/TR-004Q, Rev. 02D. Las Vegas, Nevada: Yucca Mountain Site Characterization Office. ACC: MOL.20030617.0322. TBV-5172

7.2 CODES, STANDARDS, PROCEDURES AND REGULATIONS

AP-3.12Q, Rev. 2, ICN 1. *Design Calculations and Analyses.* Washington, D.C.: U.S. Department of Energy, Office of Civilian Radioactive Waste Management. ACC: DOC.20030827.0013.

ASTM A 20/A20M-99a. 1999. *Standard Specification for General Requirements for Steel Plates for Pressure Vessels.* West Conshohocken, Pennsylvania: American Society for Testing and Materials. TIC: 247403.

ASTM A 516/A 516M-01. 2001. *Standard Specification for Pressure Vessel Plates, Carbon Steel, for Moderate- and Lower-Temperature Service.* West Conshohocken, Pennsylvania: American Society for Testing and Materials. TIC: 253997.

7.3 DATA USED BY DATA TRACKING NUMBER

MO0003RIB00071.000. Physical and Chemical Characteristics of Alloy 22. Submittal date: 03/13/2000.

MO0109RIB00049.001. Waste Package Material Properties: Neutron Absorbing Materials. Submittal date: 09/17/2001.

MO9906RIB00048.000. Waste Package Material Properties: Waste Form Materials. Submittal date: 06/09/1999.

7.4 SOFTWARE CODES

CRWMS M&O 1998a. *Software Code: MCNP.* 4B2LV. HP, HPUX 9.07 and 10.20; PC, Windows 95; Sun, Solaris2.6, 3003-V4B2LV.

CRWMS M&O 20000. *Software Code: SCALE.* V4.4A. HP. 10129-4.4A-00.

INTENTIONALLY LEFT BLANK

8 ATTACHMENTS

Table 8-1 presents the attachment specifications for this calculation file. The input and output (or compilation of output files) are provided electronically on an attachment CD (Attachment XII) to this calculation file. A listing of the contents of the CD is provided in Attachment XI.

Table 8-1. Attachment Listing

Attachment #	# of Pages	Description
I	8	Cooper BWR SAS2H Data and Results
II	10	Gundremmingen BWR SAS2H Data and Results
III	18	Japan Power Demonstration Reactor (JPDR) BWR SAS2H Data and Results
IV	5	44-BWR Waste Package Drawings [a]
V	16	MCNP Input Development
VI	4	MCNP Results
VII	8	Bias and Uncertainty Determination
VIII	2	Normal Distribution Determination
IX	4	General BWR Case Lower Uniform Tolerance Band
X	2	Simple BWR Case Normal Distribution Tolerance Limit
XI	3	Index of Compact Disc Attachment
XII	N/A	Compact Disc Attachment

Source: [a] Drawings are taken from BSC 2003c which states to use BSC 2001

INTENTIONALLY LEFT BLANK

ATTACHMENT I
Cooper BWR SAS2H Data and Results

To assure traceability of documentation, Table I-1 ties together the file names used with the complete title line of the SAS2H code from Hermann and DeHart (1998).

Table I-1. Original File Title Lines and Numerical Assignments.

File	Page Ref.	File Title
N01	53	sas2 Cooper BWR, assy cz346, rod add2966 cut-b, 18.96 GWd/MTU b5 7/97 4.3r
N02	54	sas2 Cooper BWR, assy cz346, rod add2966 cut-k, 33.07 GWd/MTU b5 7/97 4.3r
N03	56	sas2 Cooper BWR, assy cz346, rod add2966 cut-t, 33.94 GWd/MTU b5 7/97 4.3r
N04	57	sas2 Cooper BWR, assy cz346, rod add2974 cut-b, 17.84 GWd/MTU b5 7/97 4.3r
N05	59	sas2 Cooper BWR, assy cz346, rod add2974 cut-j, 29.23 GWd/MTU b5 7/97 4.3r
N06	61	sas2 Cooper BWR, assy cz346, rod add2974 cut-u, 31.04 GWd/MTU b5 7/97 4.3r

Source: Herman and DeHart (1998, App. B)

The Table I-2 provides the operating history of the assemblies sampled from the Cooper reactor core.

Table I-2. Cooper Operating History

Cycle No.	1	2	3	6	7
Cycle length, days	806	306	165	317	347
downtime, days	60	31	800	49	0
Assembly Burn-up (GWd/MTU)					
Cumulative (GWd/MTU)	13.90	19.14	21.92	25.20	28.05
Increment/cycle (GWd/MTU)	13.90	5.24	2.78	3.28	2.85
Rod ADD2966 (B3), 351.7 cm	9.396	3.542	1.879	2.217	1.926
Rod ADD2966 (B3), 186.9 cm	16.388	6.178	3.278	3.867	3.360
Rod ADD2966 (B3), 131.0 cm	16.819	6.34	3.364	3.969	3.448
Rod ADD2974 (C3), 350.1 cm	8.840	3.333	1.768	2.086	1.813
Rod ADD2974 (C3), 290.7 cm	14.485	5.460	2.897	3.418	2.970
Rod ADD2974 (C3), 114.7 cm	15.382	5.799	3.076	3.630	3.154
Cycle average power,					
MW/MTUO_2					
Assembly CZ346 (full)	17.246	17.124	16.848	10.347	8.213
Rod ADD2966 (B3), 351.7 cm	10.275	10.203	10.039	6.165	4.894
Rod ADD2966 (B3), 186.9 cm	17.922	17.796	17.509	10.753	8.535
Rod ADD2966 (B3), 131.0 cm	18.394	18.264	17.970	11.036	8.760
Rod ADD2974 (C3), 350.1 cm	9.668	9.600	9.446	5.801	4.605
Rod ADD2974 (C3), 290.7 cm	15.841	15.729	15.476	9.504	7.544
Rod ADD2974 (C3), 114.7 cm	16.822	16.703	16.435	10.093	8.011

Source: Hermann and DeHart (1998, p. 9)

Tables I-3, 5, 7, 9, 11, and 13 presents the measured isotopes from the Cooper Data set; the principal isotopes are in bold print. The SAS2H column presents the calculated isotope concentrations. The final column is the percent difference for the set of runs with SAS2H from Equation I-1.

$$\% \text{ Difference Between Measured and Calculated Isotopes} = \{(C/M)-1\}/100 \quad \text{(Eq. I-1)}$$

Most of the RCA measurements are given in g/MTUO_2. However, some of the RCA results are only provided in Curie (Ci) per gram UO_2. Equation 10 provided the algorithm to calculate the specific activity of the isotopes. The specific activity is calculated for the isotopes in Table I-4 and multiplied by the calculated concentration to determine the calculated activity. The specific activities are also used in Tables I-6, 8, 10, 12, and 14 to convert isotopic concentrations (g/MTUO_2) to Activities (Ci/gUO_2) matching the RCA data.

The measurement for Curium was provided as the sum of the isotopes: Cm-243 + Cm-244. Both isotopic concentrations were collected from the SAS2H output and converted to activity units. The sum of the activities was then compared to the measured total activity.

Isotopic data is from *Nuclides and Isotopes, Chart of the Nuclides* (Parrington et al. 1996).

The isotopes of: ^{79}Se, ^{90}Sr, and ^{126}Sn did demonstrate high percent differences; however, the low concentrations make these insignificant. These isotopes were not available in the cross-section library used by MCNP, or were not used for other reasons as listed in Table 3-1.

Each reactor set measured a different set of isotopes; a tabulation of how many runs are available for each isotope is presented in Table 5-4.

All input files are provided on the compact disk attachment (Attachment XII).

Table I-3. Isotopic Concentrations for Cooper Case No. 1

No. 1	Rod ADD2966 cut b		
	@ 18.96 (GWd/MTU)		
Isotopes	**Calculated Concentration ($g/MTUO_2$) SAS2H**	**Measured Concentration ($g/MTUO_2$)**	**% Diff. Between Measured and Calculated**
U-234	1.696E-01	1.700E-01	-0.2%
U-235	1.176E+01	1.191E+01	-1.3%
U-236	2.612E+00	2.630E+00	-0.7%
U-238	8.433E+02	8.437E+02	0.0%
Pu-238	5.308E-02	5.350E-02	-0.8%
Pu-239	3.983E+00	3.738E+00	6.6%
Pu-240	1.248E+00	1.220E+00	2.3%
Pu-241	3.995E-01	3.403E-01	17.4%
Pu-242	1.216E-01	9.892E-02	22.9%
	Activity (Curies/gram UO_2)		
Np-237	1.30E-07	1.110E-07	17.3%
Am-241	6.66E-04	5.180E-04	28.6%
Cm-243	3.28E-06	N/A	N/A
Cm-244	1.53E-04	N/A	N/A
Cm-243+Cm-244	1.56E-04	1.100E-04	42.0%
Se-79	1.8E-08	2.770E-08	-36.6%
Sr-90	3.33E-02	3.210E-02	3.6%
Tc-99	7.10E-06	6.260E-06	13.3%
Sn-126	9.5E-08	7.790E-08	22.6%
Cs-135	4.1E-07	3.740E-07	10.6%
Cs-137	4.42E-02	4.270E-02	3.4%

Source: Measured Data: Hermann and Dehart (1998, p. 105)

Table I-4. Activity Conversion for Cooper Case No. 1

Isotopes	**At. Wt. (g/mole)**	**$T_{1/2}$ Half-Life (y)**	**Specific Activity (Ci/g)**	**SAS2H Mass (mg/gU)**	**Calculated Activity (Ci/gU)**
Np-237	237.04817	2.14E+06	7.05E-04	1.85E-01	1.30E-07
Am-241	241.05682	432.7	3.4274E+00	1.94E-01	6.66E-04
Cm-243	243.06138	29.1	5.05E+01	6.50E-05	3.28E-06
Cm-244	244.06275	18.1	8.09E+01	1.89E-03	1.53E-04
Cm-243+Cm-244	N/A			N/A	1.56E-04
Se-79[1]	78.91850	6.5E+05	7.0E-03	2.52E-03	1.8E-08
Sr-90	89.90774	28.78	1.382E+02	2.41E-01	3.33E-02
Tc-99	98.90625	2.13E+05	1.70E-02	4.18E-01	7.10E-06
Sn-126[1]	125.90765	2.5E+05	1.1E-02	8.41E-03	9.5E-08
Cs-135[1]	134.90597	2.3E+06	1.2E-03	3.59E-01	4.1E-07
Cs-137	136.90708	30.07	8.684E+01	5.09E-01	4.42E-02

Source: Atomic Weights (At. Wt.) from Audi and Wapstra (1995), Half-lives from Parrington, et al. (1996)

Notes: [1] Only two significant digits were available in the half-life reference.

Table I-5. Isotopic Concentrations for Cooper Case No. 2

No. 2	Rod ADD2966 cut k		
	@ 33.07 (GWd/MTU)		
Isotopes	Calculated Concentration ($g/MTUO_2$) SAS2H	Measured Concentration ($g/MTUO_2$)	% Diff. Between Measured and Calculated SAS2H
U-234	1.393E-01	1.350E-01	3.1%
U-235	5.326E+00	5.340E+00	-0.3%
U-236	3.478E+00	3.530E+00	-1.5%
U-238	8.342E+02	8.346E+02	0.0%
Pu-238	1.629E-01	1.743E-01	-6.6%
Pu-239	3.913E+00	3.579E+00	9.3%
Pu-240	2.089E+00	2.216E+00	-5.7%
Pu-241	6.907E-01	6.390E-01	8.1%
Pu-242	4.672E-01	4.407E-01	6.0%
	Activity (Curies/gram UO_2)		
Np-237	2.433E-07	2.540E-07	-4.2%
Am-241	1.062E-03	8.780E-04	20.9%
Cm-243	1.686E-05	N/A	N/A
Cm-244	1.718E-03	N/A	N/A
Cm-243+Cm-244	1.735E-03	1.450E-03	19.7%
Se-79	3.0E-08	4.590E-08	-35%
Sr-90	5.243E-02	4.860E-02	7.9%
Tc-99	1.176E-05	1.030E-05	14.2%
Sn-126	1.9E-07	1.520E-07	28%
Cs-135	4.9E-07	4.460E-07	9.1%
Cs-137	7.728E-02	7.480E-02	3.3%

Source: Measured Data: Hermann and Dehart (1998, p. 105)

Table I-6. Activity Conversion for Cooper Case No. 2

Isotopes	Specific Activity (Ci/g)	SAS2H (g/MTU)	Calculated Activity (Ci/gU)
Np-237	7.05E-04	3.453E-01	2.433E-07
Am-241	3.4274E+00	3.097E-01	1.062E-03
Cm-243	5.05E+01	3.335E-04	1.686E-05
Cm-244	8.09E+01	2.123E-02	1.718E-03
Cm-243+Cm-244	N/A	N/A	1.735E-03
Se-79	7.0E-03	4.29E-03	3.0E-08
Sr-90	1.382E+02	3.79E-01	5.243E-02
Tc-99	1.70E-02	6.93E-01	1.176E-05
Sn-126	1.1E-02	1.71E-02	1.9E-07
Cs-135	1.2E-03	4.22E-01	4.9E-07
Cs-137	8.684E+01	8.90E-01	7.728E-02

Table I-7. Isotopic Concentrations for Cooper Case No. 3

No. 3	Rod ADD2966 cut t		
	@ 33.94 (GWd/MTU)		
Isotopes	Calculated Concentration ($g/MTUO_2$) SAS2H	Measured Concentration ($g/MTUO_2$)	% Diff. Between Measured and Calculated SAS2H
U-234	1.383E-01	1.440E-01	-3.9%
U-235	4.715E+00	4.830E+00	-2.4%
U-236	3.520E+00	3.630E+00	-3.0%
U-238	8.344E+02	8.381E+02	-0.4%
Pu-238	1.593E-01	1.706E-01	-6.6%
Pu-239	3.611E+00	3.336E+00	8.2%
Pu-240	2.083E+00	2.190E+00	-4.9%
Pu-241	6.594E-01	6.201E-01	6.3%
Pu-242	4.966E-01	4.737E-01	4.8%
	Activity (Curies/gram UO_2)		
Np-237	2.378E-07	2.460E-07	-3.3%
Am-241	1.000E-03	8.380E-04	19.3%
Cm-243	1.656E-05	N/A	N/A
Cm-244	1.725E-03	N/A	N/A
Cm-243+Cm-244	1.742E-03	1.500E-03	16.1%
Se-79	3.1E-08	4.960E-08	-38%
Sr-90	5.389E-02	5.090E-02	5.9%
Tc-99	1.206E-05	1.060E-05	13.8%
Sn-126	2.0E-07	1.600E-07	24%
Cs-135	4.7E-07	4.290E-07	9.1%
Cs-137	7.924E-02	7.700E-02	2.9%

Source: Measured Data: Hermann and Dehart (1998, p. 106)

Table I-8. Activity Conversion for Cooper Case No. 3

Isotopes	Specific Activity (Ci/g)	SAS2H (g/MTU)	Calculated Activity (Ci/gU)
Np-237	7.05E-04	3.37E-01	2.378E-07
Am-241	3.4274E+00	2.92E-01	1.000E-03
Cm-243	5.05E+01	3.28E-04	1.656E-05
Cm-244	8.09E+01	2.13E-02	1.725E-03
Cm-243+Cm-244	N/A	N/A	1.742E-03
Se-79	7.0E-03	4.40E-03	3.1E-08
Sr-90	1.382E+02	3.90E-01	5.389E-02
Tc-99	1.70E-02	7.11E-01	1.206E-05
Sn-126	1.1E-02	1.75E-02	2.0E-07
Cs-135	1.2E-03	4.06E-01	4.7E-07
Cs-137	8.684E+01	9.12E-01	7.924E-02

Table I-9. Isotopic Concentrations for Cooper Case No. 4

No. 4	Rod ADD2974 cut b		
	@ 17.84 (GWd/MTU)		
Isotopes	Calculated Concentration ($g/MTUO_2$) SAS2H	Measured Concentration ($g/MTUO_2$)	% Diff. Between Measured and Calculated SAS2H
U-234	1.725E-01	1.740E-01	-0.9%
U-235	1.237E+01	1.300E+01	-4.9%
U-236	2.513E+00	2.480E+00	1.3%
U-238	8.441E+02	8.545E+02	-1.2%
Pu-238	4.602E-02	5.210E-02	-11.7%
Pu-239	3.909E+00	4.056E+00	-3.6%
Pu-240	1.163E+00	1.184E+00	-1.8%
Pu-241	3.678E-01	3.415E-01	7.7%
Pu-242	1.038E-01	8.742E-02	18.7%
	Activity (Curies/gram UO_2)		
Np-237	1.200E-07	1.090E-07	10.1%
Am-241	6.103E-04	5.230E-04	16.7%
Cm-243	2.656E-06	N/A	N/A
Cm-244	1.141E-04	N/A	N/A
Cm-243+Cm-244	1.168E-04	1.140E-04	2.5%
Se-79	1.7E-08	2.700E-08	-39%
Sr-90	3.166E-02	2.920E-02	8.4%
Tc-99	6.706E-06	6.170E-06	8.7%
Sn-126	8.8E-08	7.340E-08	20%
Cs-135	4.0E-07	3.830E-07	4.6%
Cs-137	4.162E-02	4.050E-02	2.8%

Source: Measured Data: Hermann and Dehart (1998, p. 106)

Table I-10. Activity Conversion for Cooper Case No. 4

Isotopes	Specific Activity (Ci/g)	SAS2H (g/MTU)	Calculated Activity (Ci/gU)
Np-237	7.05E-04	1.70E-01	1.200E-07
Am-241	3.4274E+00	1.78E-01	6.103E-04
Cm-243	5.05E+01	5.26E-05	2.656E-06
Cm-244	8.09E+01	1.41E-03	1.141E-04
Cm-243+Cm-244	N/A	N/A	1.168E-04
Se-79	7.0E-03	2.38E-03	1.7E-08
Sr-90	1.382E+02	2.29E-01	3.166E-02
Tc-99	1.70E-02	3.95E-01	6.706E-06
Sn-126	1.1E-02	7.77E-03	8.8E-08
Cs-135	1.2E-03	3.48E-01	4.0E-07
Cs-137	8.684E+01	4.79E-01	4.162E-02

Table I-11. Isotopic Concentrations for Cooper Case No. 5

No. 5	Rod ADD2974 cut j		
	@ 29.23 (GWd/MTU)		
Isotopes	Calculated Concentration ($g/MTUO_2$) SAS2H	Measured Concentration ($g/MTUO_2$)	% Diff. Between Measured and Calculated SAS2H
U-234	1.461E-01	1.460E-01	0.0%
U-235	7.036E+00	7.760E+00	-9.3%
U-236	3.299E+00	3.360E+00	-1.8%
U-238	8.363E+02	8.490E+02	-1.5%
Pu-238	1.359E-01	1.460E-01	-6.9%
Pu-239	4.230E+00	4.526E+00	-6.5%
Pu-240	1.927E+00	2.164E+00	-11.0%
Pu-241	6.601E-01	6.649E-01	-0.7%
Pu-242	3.490E-01	3.247E-01	7.5%
	Activity (Curies/gram UO_2)		
Np-237	2.215E-07	2.350E-07	-5.7%
Am-241	1.033E-03	9.460E-04	9.2%
Cm-243	1.295E-05	N/A	N/A
Cm-244	1.104E-03	N/A	N/A
Cm-243+Cm-244	1.116E-03	1.100E-03	1.5%
Se-79	2.7E-08	4.260E-08	-38%
Sr-90	4.730E-02	4.380E-02	8.0%
Tc-99	1.049E-05	9.860E-06	6.4%
Sn-126	1.7E-07	1.410E-07	18%
Cs-135	4.9E-07	5.230E-07	-6.2%
Cs-137	6.822E-02	7.250E-02	-5.9%

Source: Measured Data: Hermann and Dehart (1998, p. 107)

Table I-12. Activity Conversion for Cooper Case No. 5

Isotopes	Specific Activity (Ci/g)	SAS2H (g/MTU)	Calculated Activity (Ci/gU)
Np-237	7.05E-04	3.14E-01	2.215E-07
Am-241	3.427E+00	3.01E-01	1.033E-03
Cm-243	5.05E+01	2.56E-04	1.295E-05
Cm-244	8.09E+01	1.36E-02	1.104E-03
Cm-243+Cm-244	N/A	N/A	1.116E-03
Se-79	7.0E-03	3.81E-03	2.7E-08
Sr-90	1.382E+02	3.42E-01	4.730E-02
Tc-99	1.70E-02	6.18E-01	1.049E-05
Sn-126	1.1E-02	1.47E-02	1.7E-07
Cs-135	1.2E-03	4.26E-01	4.9E-07
Cs-137	8.684E+01	7.86E-01	6.822E-02

Table I-13. Isotopic Concentrations for Cooper Case No. 6

No. 6	Sample ADD2974 cut u		
	@ 31.04 (GWd/MTU)		
Isotopes	Calculated Concentration ($g/MTUO_2$) SAS2H	Measured Concentration ($g/MTUO_2$)	% Diff. Between Measured and Calculated SAS2H
U-234	1.448E-01	1.540E-01	-6.0%
U-235	5.554E+00	6.280E+00	-11.6%
U-236	3.410E+00	3.480E+00	-2.0%
U-238	8.367E+02	8.455E+02	-1.0%
Pu-238	1.296E-01	1.389E-01	-6.7%
Pu-239	3.524E+00	3.668E+00	-3.9%
Pu-240	1.926E+00	2.082E+00	-7.5%
Pu-241	6.002E-01	6.139E-01	-2.2%
Pu-242	4.035E-01	3.823E-01	5.5%
	Activity (Curies/gram UO_2)		
Np-237	2.098E-07	2.360E-07	-10.9%
Am-241	9.174E-04	8.690E-04	5.4%
Cm-243	1.269E-05	N/A	N/A
Cm-244	1.093E-03	N/A	N/A
Cm-243+Cm-244	1.106E-03	1.070E-03	3.4%
Se-79	2.8E-08	4.500E-08	-37%
Sr-90	5.075E-02	4.820E-02	5.3%
Tc-99	1.120E-05	1.000E-05	12.0%
Sn-126	1.8E-07	1.460E-07	21%
Cs-135	4.5E-07	4.310E-07	4.9%
Cs-137	7.262E-02	6.850E-02	6.0%

Source: Measured Data: Hermann and Dehart (1998, p. 107)

Table I-14. Activity Conversion for Cooper Case No. 6

Isotopes	Specific Activity (Ci/g)	SAS2H (g/MTU)	Calculated Activity (Ci/gU)
Np-237	7.05E-04	2.102E-07	2.098E-07
Am-241	3.427E+00	9.164E-04	9.174E-04
Cm-243	5.05E+01	1.242E-05	1.269E-05
Cm-244	8.09E+01	1.093E-03	1.093E-03
Cm-243+Cm-244	N/A	N/A	1.106E-03
Se-79	7.0E-03	4.05E-03	2.8E-08
Sr-90	1.382E+02	3.67E-01	5.075E-02
Tc-99	1.70E-02	6.60E-01	1.120E-05
Sn-126	1.1E-02	1.55E-02	1.8E-07
Cs-135	1.2E-03	3.92E-01	4.5E-07
Cs-137	8.684E+01	8.36E-01	7.262E-02

ATTACHMENT II
Gundremmingen BWR SAS2H Data and Results

To assure traceability of documentation, Table II-1 ties together the file names used with the complete title line of the SAS2H code from Hermann and DeHart (1998).

Table II-1. Original File Title Lines and Numerical Assignments.

File	Page Ref.	File Title
N01	63	assy b23, rod a1, 44 cm, 25.730 GWd/MTU b5 7/97 4.3r
N02	64	assy b23, rod a1, 268 cm, 27.400 GWd/MTU b5 7/97 4.3r
N03	66	assy b23, rod b3, 268 cm, 21.240 GWd/MTU b5 7/97 4.3r
N04	68	assy b23, rod e3, 268 cm, 23.510 GWd/MTU b5 7/97 4.3r
N05	69	assy c16, rod a1, 44 cm, 20.300 GWd/MTU b5 7/97 4.3r
N06	71	assy c16, rod a1, 268 cm, 19.850 GWd/MTU b5 7/97 4.3r
N07	73	assy c16, rod b3, 268 cm, 14.390 GWd/MTU b5 7/97 4.3r
N08	74	assy c16, rod e5, 268 cm, 17.490 GWd/MTU b5 7/97 4.3r

Source: Herman and DeHart (1998, App. C)

The Table II-2 provides the operating history of the assemblies sampled from the Gundremmingen reactor core.

Table II-2. Gundremmingen Operating History

Cycle No.	2	3	4	5
Cycle length, days	279	323	290	309
Downtime, days	56	33	61	0
Cycle burnup, GWd/MTU				
Assembly B23	5.839	6.131	5.483	5.174
Assembly C16	------	5.959	5.083	6.026
Cycle burnup, GWd/MTU				
B23(A1), 44 cm	6.640	6.972	6.235	5.884
B23(A1), 268 cm	7.071	7.424	6.640	6.265
B23(B3), 268 cm	5.481	5.755	5.147	4.857
B23(E3), 268 cm	6.067	6.370	5.697	5.376
C16(A1), 44 cm	------	7.087	6.046	7.167
C16(A1), 268 cm	------	6.930	5.912	7.008
C16(B3), 268 cm	------	5.024	4.285	5.081
C16(E5), 268 cm	------	6.106	5.209	6.175
Cycle average power, MW/MTU				
Assembly B23 (full)	20.928	18.981	18.907	16.744
B23(A1), 44 cm	23.798	21.584	21.500	19.041
B23(A1), 268 cm	25.343	22.985	22.895	20.276
B23(B3), 268 cm	19.645	17.818	17.748	15.718
B23(E3), 268 cm	21.745	19.722	19.645	17.398
C16(A1), 44 cm	------	21.942	20.847	23.194
C16(A1), 268 cm	------	21.456	20.384	22.680

Table II-2. Gundremmingen Operating History

C16(B3), 268 cm	------	15.554	14.777	16.442
C16(E5), 268 cm	------	18.905	17.961	19.984

Source: Herman and DeHart (1998, p. 13)

The assembly unit cell in path B of SAS2H applied 2.530 weight percent U-235 to the 36 fuel rods in the entire assembly because that was the initial enrichment of the fuel samples. The material and radius of each zone were calculated by conserving material mass for assembly dimension.

Tables 3, 5, 7, 9, 11, 13, 15, and 17 present measured isotopes from the Gundremmingen data set. The SAS2H column presents the calculated isotope concentrations. The final column is the percent difference calculated with Equation I-1. Bold text identifies the principal isotopes.

As in Attachment I, three of the RCA isotope concentrations were provided in activity units. Using the same method, the specific activities are calculated in Table II-4 and applied in Tables II- 6, 8, 10, 12, 14, 16, and 18. The calculated activity units are compared to the RCA activity units, in the isotopic concentration tables.

Each reactor set measured a different set of isotopes; a tabulation of how many measurements for each isotope is presented in Table 5-4.

Table II-3. Isotopic Concentrations for Gundremmingen Case No. 1

No. 1	b23 rod a1 44 cm		
	@ 25.730 (GWd/MTU)		
Isotopes	Calculated Concentration ($g/MTUO_2$)	Measured Concentration	% Diff. Between Measured and Calculated
	SAS2H	(g/MTU)	SAS2H
U-235	6.058E+00	6.307E+00	-4.0%
U-236	3.201E+00	3.280E+00	-2.4%
U-238	9.568E+02	9.561E+02	0.1%
Pu-238	8.126E-02	6.800E-02	19.5%
Pu-239	3.800E+00	3.736E+00	1.7%
Pu-240	1.943E+00	1.815E+00	7.0%
Pu-241	6.864E-01	7.052E-01	-2.7%
Pu-242	3.505E-01	3.305E-01	6.0%
Cm-244	9.270E-03	8.868E-03	4.5%
Nd-148	2.842E-01	2.899E-01	-2.0%
	Activity (Curies/gram U)		
Cs-134	3.028E-02	3.461E-02	-12.5%
Cs-137	7.726E-02	8.942E-02	-13.6%
Eu-154	2.687E-03	3.707E-03	-27.5%

Source: Measured Values from Hermann and DeHart (1998, p. 109)

Table II-4. Activity Conversion for Gundremmingen Case No. 1

Isotopes	At. Wt.	$T_{1/2}$ Half-Life (y)	Specific Activity (Ci/g)	SAS2H Mass (mg/gU)	Calculated Activity (Ci/gU)
Cs-134	133.90671	2.065	1.293E+03	2.342E-02	3.028E-02
Cs-137	136.90708	30.07	8.684E+01	8.935E-01	7.726E-02
Eu-154	153.92280	8.59	2.703E+02	9.938E-03	2.687E-03

Source: Atomic Weights (At. Wt.) from Audi and Wapstra (1995), Half-lives from Parrington, et al. (1996)

Table II-5. Isotopic Concentrations for Gundremmingen Case No. 2

No. 2	b23 rod a1 268 cm		
	@ 27.400 (GWd/MTU)		
Isotopes	Calculated Concentration (g/MTU)	Measured Concentration	% Diff. Between Measured and Calculated
	SAS2H	(g/MTU)	SAS2H
U-235	6.429E+00	6.741E+00	-4.6%
U-236	3.251E+00	3.294E+00	-1.3%
U-238	9.532E+02	9.519E+02	0.1%
Pu-238	1.168E-01	1.080E-01	8.1%
Pu-239	4.747E+00	4.800E+00	-1.1%
Pu-240	2.187E+00	2.168E+00	0.9%
Pu-241	8.617E-01	9.540E-01	-9.7%
Pu-242	3.945E-01	4.494E-01	-12.2%
Cm-244	1.816E-02	1.977E-02	-8.1%
Nd-148	3.025E-01	3.088E-01	-2.0%
	Activity (Curies/gram U)		
Cs-134	3.702E-02	3.222E-02	14.9%
Cs-137	8.196E-02	7.031E-02	16.6%
Eu-154	3.705E-03	3.708E-03	-0.1%

Source: Measured Values from Hermann and DeHart (1998, p. 109)

Table II-6. Activity Conversion for Gundremmingen Case No. 2

Isotopes	Specific Activity (Ci/g)	SAS2H Mass (g/MTU)	Calculated Activity (Ci/gU)
Cs-134	1.293E+03	2.863E-02	3.702E-02
Cs-137	8.684E+01	9.479E-01	8.196E-02
Eu-154	2.703E+02	1.370E-02	3.705E-03

Table II-7. Isotopic Concentrations for Gundremmingen Case No. 3

No. 3	b23 rod b3 268 cm		
	@ 21.240 (GWd/MTU)		
Isotopes	Calculated Concentration (g/MTU)	Measured Concentration	% Diff. Between Measured and Calculated
	SAS2H	(g/MTU)	SAS2H
U-235	9.076E+00	9.823E+00	-7.6%
U-236	2.884E+00	2.952E+00	-2.3%
U-238	9.585E+02	9.559E+02	0.3%
Pu-238	6.786E-02	8.300E-02	-18.2%
Pu-239	4.545E+00	5.372E+00	-15.4%
Pu-240	1.711E+00	1.855E+00	-7.8%
Pu-241	6.610E-01	7.855E-01	-15.8%
Pu-242	2.186E-01	2.232E-01	-2.1%
Cm-244	5.778E-03	8.622E-03	-33.0%
Nd-148	2.351E-01	2.394E-01	-1.8%
	Activity (Curies/gram U)		
Cs-134	2.354E-02	2.645E-02	-11.0%
Cs-137	6.371E-02	6.485E-02	-1.8%
Eu-154	2.372E-03	3.246E-03	-26.9%

Source: Measured Values from Hermann and DeHart (1998, p. 110)

Table II-8. Activity Conversion for Gundremmingen Case No. 3

Isotopes	Specific Activity (Ci/g)	SAS2H Mass (g/MTU)	Calculated Activity (Ci/gU)
Cs-134	1.2929E+03	1.821E-02	2.354E-02
Cs-137	8.6465E+01	7.368E-01	6.371E-02
Eu-154	2.7038E+02	8.774E-03	2.372E-03

Table II-9. Isotopic Concentrations for Gundremmingen Case No. 4

No. 4	**b23 rod e3 268 cm**		
Burn-up	**@ 23.510 (GWd/MTU)**		
Isotopes	**Calculated Concentration (g/MTU)**	**Measured Concentration**	**% Diff. Between Measured and Calculated**
	SAS2H	**(g/MTU)**	**SAS2H**
U-235	8.017E+00	8.618E+00	-7.0%
U-236	3.037E+00	3.133E+00	-3.1%
U-238	9.566E+02	9.547E+02	0.2%
Pu-238	8.429E-02	8.400E-02	0.3%
Pu-239	4.639E+00	4.820E+00	-3.8%
Pu-240	1.896E+00	1.845E+00	2.8%
Pu-241	7.192E-01	7.276E-01	-1.2%
Pu-242	2.782E-01	2.461E-01	13.0%
Cm-244	8.983E-03	9.176E-03	-2.1%
Nd-148	2.599E-01	2.717E-01	-4.3%
	Activity (Curies/gram U)		
Cs-134	2.312E-02	2.481E-02	-6.8%
Cs-137	6.948E-02	6.640E-02	4.6%
Eu-154	2.714E-03	3.035E-03	-10.6%

Source: Measured Values from Hermann and DeHart (1998, p. 110)

Table II-10. Activity Conversion for Gundremmingen Case No. 4

Isotopes	**Specific Activity (Ci/g)**	**SAS2H Mass (g/MTU)**	**Calculated Activity (Ci/gU)**
Cs-134	1.293E+03	1.788E-02	2.312E-02
Cs-137	8.684E+01	8.036E-01	6.948E-02
Eu-154	2.703E+02	1.004E-02	2.714E-03

Table II-11. Isotopic Concentrations for Gundremmingen Case No. 5

No. 5	**a1 rod b3 44 cm**		
	@ 20.300 (GWd/MTU)		
Isotopes	**Calculated Concentration (g/MTU)**	**Measured Concentration**	**% Diff. Between Measured and Calculated**
	SAS2H	**(g/MTU)**	**SAS2H**
U-235	8.603E+00	8.588E+00	0.2%
U-236	2.839E+00	3.077E+00	-7.7%
U-238	9.604E+02	9.607E+02	0.0%
Pu-238	4.422E-02	3.600E-02	22.8%
Pu-239	3.676E+00	3.635E+00	1.1%
Pu-240	1.519E+00	1.472E+00	3.2%
Pu-241	5.250E-01	5.205E-01	0.9%
Pu-242	1.920E-01	1.820E-01	5.5%
Cm-244	2.767E-03	2.614E-03	5.9%
Nd-148	2.249E-01	2.268E-01	-0.8%
	Activity (Curies/gram U)		
Cs-134	1.735E-02	1.884E-02	-7.9%
Cs-137	6.093E-02	6.196E-02	-1.7%
Eu-154	1.671E-03	1.777E-03	-6.0%

Source: Measured Values from Hermann and DeHart (1998, p. 111)

Table II-12. Activity Conversion for Gundremmingen Case No. 5

Isotopes	**Specific Activity (Ci/g)**	**SAS2H Mass (g/MTU)**	**Calculated Activity (Ci/gU)**
Cs-134	1.293E+03	1.342E-02	1.735E-02
Cs-137	8.684E+01	7.047E-01	6.093E-02
Eu-154	2.703E+02	6.181E-03	1.671E-03

Table II-13. Isotopic Concentrations for Gundremmingen Case No. 6

No. 6	c16 rod a1 268 cm		
	@ 19.850 (GWd/MTU)		
Isotopes	Calculated Concentration (g/MTU)	Measured Concentration	% Diff. Between Measured and Calculated
	SAS2H	(g/MTU)	SAS2H
U-235	9.558E+00	9.803E+00	-2.5%
U-236	2.779E+00	2.901E+00	-4.2%
U-238	9.593E+02	9.591E+02	0.0%
Pu-238	5.216E-02	4.800E-02	8.7%
Pu-239	4.279E+00	4.418E+00	-3.1%
Pu-240	1.553E+00	1.533E+00	1.3%
Pu-241	5.895E-01	6.501E-01	-9.3%
Pu-242	1.870E-01	2.013E-01	-7.1%
Cm-244	3.738E-03	4.480E-03	-16.6%
Nd-148	2.200E-01	2.217E-01	-0.8%
	Activity (Curies/gram U)		
Cs-134	1.811E-02	2.370E-02	-23.6%
Cs-137	5.942E-02	6.532E-02	-9.0%
Eu-154	1.909E-03	2.175E-03	-12.2%

Source: Measured Values from Hermann and DeHart (1998, p. 111)

Table II-14. Activity Conversion for Gundremmingen Case No. 6

Isotopes	Specific Activity (Ci/g)	SAS2H Mass (g/MTU)	Calculated Activity (Ci/gU)
Cs-134	1.293E+03	1.401E-02	1.811E-02
Cs-137	8.684E+01	6.872E-01	5.942E-02
Eu-154	2.703E+02	7.062E-03	1.909E-03

Table II-15. Isotopic Concentrations for Gundremmingen Case No. 7

No. 7	c16 rod b3 268 cm		
	@ 14.390 (GWd/MTU)		
Isotopes	Calculated Concentration (g/MTU)	Measured Concentration	% Diff. Between Measured and Calculated
	SAS2H	(g/MTU)	SAS2H
U-235	1.277E+01	1.311E+01	-2.6%
U-236	2.281E+00	2.452E+00	-7.0%
U-238	9.635E+02	9.621E+02	0.1%
Pu-238	2.510E-02	3.300E-02	-23.9%
Pu-239	3.889E+00	4.695E+00	-17.2%
Pu-240	1.079E+00	1.170E+00	-7.8%
Pu-241	3.867E-01	4.807E-01	-19.6%
Pu-242	8.070E-02	8.897E-02	-9.3%
Cm-244	7.960E-04	1.569E-03	-49.3%
Nd-148	1.598E-01	1.632E-01	-2.1%
	Activity (Curies/gram U)		
Cs-134	1.139E-02	1.438E-02	-20.8%
Cs-137	4.355E-02	4.621E-02	-5.8%
Eu-154	1.063E-03	1.568E-03	-32.2%

Source: Measured Values from Hermann and DeHart (1998, p. 112)

Table II-16. Activity Conversion for Gundremmingen Case No. 7

Isotopes	Specific Activity (Ci/g)	SAS2H Mass (g/MTU)	Calculated Activity (Ci/gU)
Cs-134	1.293E+03	8.812E-03	1.139E-02
Cs-137	8.684E+01	5.037E-01	4.355E-02
Eu-154	2.703E+02	3.933E-03	1.063E-03

Table II-17. Isotopic Concentrations for Gundremmingen Case No. 8

No. 8	c16 rod e5 268 cm		
	@ 17.490 (GWd/MTU)		
Isotopes	**Calculated Concentration (g/MTU)**	**Measured Concentration**	**% Diff. Between Measured and Calculated**
	SAS2H	**(g/MTU)**	**SAS2H**
U-235	1.086E+01	1.044E+01	4.1%
U-236	2.581E+00	2.740E+00	-5.8%
U-238	9.611E+02	9.612E+02	0.0%
Pu-238	3.935E-02	4.100E-02	-4.0%
Pu-239	4.143E+00	4.157E+00	-0.3%
Pu-240	1.354E+00	1.442E+00	-6.1%
Pu-241	5.160E-01	5.328E-01	-3.2%
Pu-242	1.355E-01	1.500E-01	-9.7%
Cm-244	2.087E-03	2.794E-03	-25.3%
Nd-148	1.940E-01	1.989E-01	-2.5%
	Activity (Curies/gram U)		
Cs-134	1.762E-02	1.697E-02	3.82%
Cs-137	5.314E-02	5.241E-02	1.39%
Eu-154	1.580E-03	1.772E-03	-10.82%

Source: Measured Values from Hermann and DeHart (1998, p. 112)

Table II-18. Activity Conversion for Gundremmingen Case No. 8

Isotopes	**Specific Activity (Ci/g)**	**SAS2H Mass (g/MTU)**	**Calculated Activity (Ci/gU)**
Cs-134	1.293E+03	1.363E-02	1.762E-02
Cs-137	8.684E+01	6.146E-01	5.314E-02
Eu-154	2.703E+02	5.845E-03	1.580E-03

ATTACHMENT III
Japan Power Demonstration Reactor (JPDR) BWR SAS2H Data and Results

To assure traceability of documentation, Table III-1 ties together the file names used with the complete title line of the SAS2H code from Hermann and DeHart (1998).

Table III-1. Original File Title Lines and Numerical Assignments.

File	Page Ref.	File Title
N01	77	JPDR BWR, assy a-14, rod c-d-3-4, node # 2, 3.3032 GWd/MTU b5 7/97 4.3r
N02	78	JPDR BWR, assy a-14, rod c-d-3-4, node # 9, 4.0351 GWd/MTU b5 7/97 4.3r
N03	80	JPDR BWR, assy a-18, rod c-d-3-4, node # 2, 2.7120 GWd/MTU b5 7/97 4.3r
N04	82	JPDR BWR, assy a-18, rod c-d-3-4, node # 6, 4.2510 GWd/MTU b5 7/97 4.3r
N05	83	JPDR BWR, assy a-20, rod a-1, node # 3, 7.0098 GWd/MTU b5 7/97 4.3r
N06	85	JPDR BWR, assy a-20, rod a-3, node # 10, 6.1465 GWd/MTU b5 7/97 4.3r
N07	87	JPDR BWR, assy a-20, rod a-6, node # 3, 6.9535 GWd/MTU b5 7/97 4.3r
N08	88	JPDR BWR, assy a-20, rod a-6, node # 9, 6.5125 GWd/MTU b5 7/97 4.3r
N09	90	JPDR BWR, assy a-20, rod c-3, node # 1, 2.6463 GWd/MTU b5 7/97 4.3r
N10	92	JPDR BWR, assy a-20, rod c-3, node # 3 at 144.885 cm, 5.0861 GWd/MTU b5 7/97 4.3r
N11	93	JPDR BWR, assy a-20, rod c-3, node # 5, 6.0808 GWd/MTU b5 7/97 4.3r
N12	95	JPDR BWR, assy a-20, rod c-3, node # 8, 6.0433 GWd/MTU b5 7/97 4.3r
N13	97	JPDR BWR, assy a-20, rod c-3, # 10 at 31.785 cm, 5.0580 GWd/MTU b5 7/97 4.3r
N14	98	JPDR BWR, assy a-20, rod c-3, # 12 at 7.346 cm, 2.1583 GWd/MTU b5 7/97 4.3r
N15	100	JPDR BWR, assy a-20, rod e-2, # 3 at 114.885 cm, 5.6022 GWd/MTU b5 7/97 4.3r
N16	101	JPDR BWR, assy a-20, rod e-2, # 10 at 31.785 cm, 5.3770 GWd/MTU b5 7/97 4.3r

Source: Herman and DeHart (1998, App. D)

The Table III-2 provides the operating history of the assemblies sampled from the JPDR reactor core.

Table III-2. JPDR Operating History

Assembly ID	Pin No.	Sample Node No.	At. %[a] Fission	Burnup[b] GWd/MTU	Total uptime	Power MW/MTU
A-14	------	2	0.352	3.0032	577.31	5.7217
A-14	------	9	0.430	4.0351	577.31	6.9895
A-18	------	2	0.289	2.7120	577.31	4.6976
A-18	------	6	0.453	4.2510	577.31	7.3634
A-20	A1	3	0.747	7.0098	577.31	12.1423
A-20	A3	10	0.655	6.1465	577.31	10.6468
A-20	A6	3	0.741	6.9535	577.31	12.0447
A-20	A6	9	0.694	6.5125	577.31	11.2808
A-20	C3	1	0.282	2.6463	577.31	4.5838

Table III-2. JPDR Operating History

Assembly ID	Pin No.	Sample Node No.	At. %[a] Fission	Burnup[b] GWd/MTU	Total uptime	Power MW/MTU
A-20	C3	3	0.542	5.0861	577.31	8.8100
A-20	C3	5	0.648	6.0808	577.31	10.5330
A-20	C3	8	0.644	6.0433	577.31	10.4680
A-20	C3	10	0.539	5.0580	577.31	8.7613
A-20	C3	12	0.230	2.1583	577.31	3.7386
A-20	E2	3	0.597	5.6022	577.31	9.7041
A-20	E2	10	0.573	5.3770	577.31	9.3139
A-14	------	------	------	5.570	577.31	9.6482
A-18	------	------	------	5.015	577.31	8.6868
A-20	------	------	------	3.707	577.31	6.4212

Source: Hermann and DeHart (1998, p. 18)

Notes: [a]Reported as part of radiochemical analyses data (derived by applying the Nd-148 burnup method).

[b] Applied the factor 9.384 times the at. % fissions to convert to burnup as GWd/MTU, assuming 200 MeV/fission (the energy /fission computed by the ORIGEN-S code.)

Tables III-3 to -18 present measured isotopes for the JPDR data set. The final column is the percent difference calculated with Equation I-1. Bold identifies the principal isotopes of interest for fuel burn-up.

Each reactor set measured a different set of isotopes; a tabulation of how many runs for each isotope is presented in Table 5-4.

Table III-3. Isotopic Concentrations for JPDR Case No. 1

No. 1	Assay a-14, rod c-d-3-4, node # 2		
	@ 3.3032 (GWd/MTU)		
Isotopes	Calculated Concentration (g/MTU)	Measured Concentration (g/MTU)	% Diff. Between Measured and Calculated
U-234	1.455E-01	1.468E-01	-0.9%
U-235	2.229E+01	2.252E+01	-1.0%
U-236	7.964E-01	7.973E-01	-0.1%
U-238	9.718E+02	9.714E+02	0.0%
Pu-238	6.493E-04	8.437E-04	-23.0%
Pu-239	1.453E+00	1.531E+00	-5.1%
Pu-240	1.118E-01	1.136E-01	-1.6%
Pu-241	1.402E-02	1.570E-02	-10.7%
Pu-242	5.404E-04	5.719E-04	-5.5%
Am-241	3.198E-03	3.356E-03	-4.7%
Cm-242	3.180E-07	2.620E-07	21.4%

Table III-3. Isotopic Concentrations for JPDR Case No. 1

No. 1	Assay a-14, rod c-d-3-4, node # 2		
	@ 3.3032 (GWd/MTU)		
Isotopes	Calculated Concentration (g/MTU)	Measured Concentration (g/MTU)	% Diff. Between Measured and Calculated
Cm-244	1.539E-07	2.200E-07	-30.0%
Cs-137	1.113E-01	1.190E-01	-6.5%
Nd-143	1.183E-01	1.168E-01	1.3%
Nd-144	1.154E-01	1.152E-01	0.2%
Nd-145	8.177E-02	8.086E-02	1.1%
Nd-146	6.500E-02	6.447E-02	0.8%
Nd-148	3.708E-02	3.679E-02	0.8%
Nd-150	1.567E-02	1.577E-02	-0.6%

Source: Measured Data from Hermann and Dehart (1998, p. 113)

Table III-4. Isotopic Concentrations for JPDR Case No. 2

No. 2	Assay a-14, rod c-d-3-4, node # 9,		
	@ 4.0351 (GWd/MTU)		
Isotopes	Calculated Concentration (g/MTU)	Measured Concentration (g/MTU)	% Diff. Between Measured and Calculated
U-234	1.443E-01	1.417E-01	1.8%
U-235	2.149E+01	2.154E+01	-0.2%
U-236	9.195E-01	9.119E-01	0.8%
U-238	9.716E+02	9.713E+02	0.0%
Pu-238	8.757E-04	1.088E-03	-19.5%
Pu-239	1.574E+00	1.647E+00	-4.4%
Pu-240	1.469E-01	1.510E-01	-2.7%
Pu-241	1.985E-02	2.145E-02	-7.5%
Pu-242	9.592E-04	1.014E-03	-5.4%
Am-241	4.528E-03	4.931E-03	-8.2%
Cm-242	5.376E-07	3.990E-07	34.7%
Cm-244	3.340E-07	4.350E-07	-23.2%
Cs-137	1.362E-01	1.455E-01	-6.4%
Nd-143	1.433E-01	1.422E-01	0.8%
Nd-144	1.422E-01	1.431E-01	-0.6%
Nd-145	9.969E-02	9.901E-02	0.7%
Nd-146	7.945E-02	7.900E-02	0.6%
Nd-148	4.526E-02	4.493E-02	0.7%
Nd-150	1.910E-02	1.924E-02	-0.7%

Source: Measured Data from Hermann and Dehart (1998, p. 113)

Table III-5. Isotopic Concentrations for JPDR Case No. 3

No. 3	**Assay a-18, rod c-d-3-4, node # 2**		
	@ 2.7120 (GWd/MTU)		
Isotopes	**Calculated Concentration (g/MTU)**	**Measured Concentration (g/MTU)**	**% Diff. Between Measured and Calculated**
U-234	1.467E-01	1.469E-01	-0.1%
U-235	2.292E+01	2.296E+01	-0.2%
U-236	6.916E-01	6.904E-01	0.2%
U-238	9.721E+02	9.720E+02	0.0%
Pu-238	4.378E-04	3.009E-04	45.5%
Pu-239	1.270E+00	1.229E+00	3.3%
Pu-240	8.146E-02	7.626E-02	6.8%
Pu-241	8.856E-03	8.451E-03	4.8%
Pu-242	2.760E-04	1.929E-04	43.1%
Am-241	2.017E-03	1.816E-03	11.1%
Cm-242	1.655E-07	1.130E-07	46.5%
Cm-244	5.603E-08	5.810E-08	-3.6%
Cs-137	9.136E-02	9.370E-02	-2.5%
Nd-143	9.794E-02	9.618E-02	1.8%
Nd-144	9.434E-02	9.388E-02	0.5%
Nd-145	6.739E-02	6.633E-02	1.6%
Nd-146	5.336E-02	5.263E-02	1.4%
Nd-148	3.047E-02	3.001E-02	1.5%
Nd-150	1.285E-02	1.284E-02	0.0%

Source: Measured Data from Hermann and Dehart (1998, p. 114)

Table III-6. Isotopic Concentrations for JPDR Case No. 4

No. 4	**Assay a-18, rod c-d-3-4, Node # 6**		
	@ 4.2510 (GWd/MTU)		
Isotopes	**Calculated Concentration (g/MTU)**	**Measured Concentration (g/MTU)**	**% Diff. Between Measured and Calculated**
U-234	1.436E-01	1.456E-01	-1.4%
U-235	2.130E+01	2.153E+01	-1.1%
U-236	9.588E-01	9.264E-01	3.5%
U-238	9.713E+02	9.710E+02	0.0%
Pu-238	1.090E-03	1.240E-03	-12.1%
Pu-239	1.709E+00	1.701E+00	0.5%
Pu-240	1.660E-01	1.599E-01	3.8%
Pu-241	2.472E-02	2.392E-02	3.3%
Pu-242	1.258E-03	1.203E-03	4.6%
Am-241	5.651E-03	5.942E-03	-4.9%
Cm-242	7.209E-07	5.350E-07	34.7%
Cm-244	5.533E-07	6.340E-07	-12.7%
Cs-137	1.434E-01	1.481E-01	-3.2%
Nd-143	1.502E-01	1.493E-01	0.6%
Nd-144	1.495E-01	1.504E-01	-0.6%
Nd-145	1.046E-01	1.042E-01	0.4%
Nd-146	8.368E-02	8.340E-02	0.3%
Nd-148	4.767E-02	4.733E-02	0.7%
Nd-150	2.023E-02	2.025E-02	-0.1%

Source: Measured Data from Hermann and Dehart (1998, p. 114)

Table III-7. Isotopic Concentrations for JPDR Case No. 5

No. 5	**Assay a-20, rod a-1, node # 3**		
	@ 7.0098 (GWd/MTU)		
Isotopes	**Calculated Concentration (g/MTU)**	**Measured Concentration (g/MTU)**	**% Diff. Between Measured and Calculated**
U-234	1.377E-01	1.353E-01	1.8%
U-235	1.867E+01	1.888E+01	-1.1%
U-236	1.401E+00	1.390E+00	0.8%
U-238	9.696E+02	9.694E+02	0.0%
Pu-238	3.710E-03	3.564E-03	4.1%
Pu-239	2.428E+00	2.360E+00	2.9%
Pu-240	3.681E-01	3.518E-01	4.6%
Pu-241	7.678E-02	7.508E-02	2.3%
Pu-242	7.162E-03	6.739E-03	6.3%
Np-237	2.166E-02	3.943E-02	-45.1%
Am-241	2.166E-02	1.825E-02	18.7%
Am-242m	8.083E-05	7.470E-05	8.2%
Cm-242	1.210E-06	8.960E-07	35.0%
Cm-244	9.005E-06	7.850E-06	14.7%
Ru-106	8.670E-04	5.793E-04	49.7%
Cs-134	1.124E-03	1.018E-03	10.4%
Cs-137	2.319E-01	2.239E-01	3.6%
Ce-144	1.839E-03	9.643E-04	90.7%
Nd-143	2.369E-01	2.366E-01	0.1%
Nd-144	2.521E-01	2.552E-01	-1.2%
Nd-145	1.689E-01	1.686E-01	0.2%
Nd-146	1.382E-01	1.386E-01	-0.3%
Nd-148	7.843E-02	7.854E-02	-0.1%
Nd-150	3.395E-02	3.371E-02	0.7%
Eu-154	6.920E-04	6.523E-04	6.1%
Eu-155	3.664E-04	6.358E-04	-42.4%

Source: Measured Data from Hermann and Dehart (1998, p. 115)

Table III-8. Isotopic Concentrations for JPDR Case No. 6

No. 6	**Assay a-20, rod a-3, node # 10**		
	@ 6.1465 (GWd/MTU)		
Isotopes	**Calculated Concentration (g/MTU)**	**Measured Concentration (g/MTU)**	**% Diff. Between Measured and Calculated**
U-234	1.399E-01	1.433E-01	-2.4%
U-235	1.940E+01	1.892E+01	2.5%
U-236	1.266E+00	1.211E+00	4.5%
U-238	9.703E+02	9.709E+02	-0.1%
Pu-238	2.413E-03	2.401E-03	0.5%
Pu-239	2.124E+00	2.016E+00	5.4%
Pu-240	2.909E-01	2.722E-01	6.9%
Pu-241	5.238E-02	4.812E-02	8.9%
Pu-242	4.237E-03	3.888E-03	9.0%
Np-237	1.473E-02	3.135E-02	-53.0%
Am-241	1.473E-02	1.311E-02	12.4%
Am-242m	4.977E-05	4.700E-05	5.9%
Cm-242	7.063E-07	5.640E-07	25.2%
Cm-244	3.487E-06	2.990E-06	16.6%
Ru-106	6.956E-04	4.296E-04	61.9%
Cs-134	8.245E-04	6.956E-04	18.5%
Cs-137	2.035E-01	1.941E-01	4.8%
Ce-144	1.632E-03	8.134E-04	100.6%
Nd-143	2.111E-01	2.114E-01	-0.1%
Nd-144	2.210E-01	2.239E-01	-1.3%
Nd-145	1.495E-01	1.498E-01	-0.2%
Nd-146	1.212E-01	1.213E-01	-0.1%
Nd-148	6.881E-02	6.885E-02	-0.1%
Nd-150	2.947E-02	2.926E-02	0.7%
Eu-154	5.020E-04	4.696E-04	6.9%
Eu-155	3.230E-04	5.326E-04	-39.3%

Source: Measured Data from Hermann and Dehart (1998, p. 115)

Table III-9. Isotopic Concentrations for JPDR Case No. 7

No. 7	**Assay a-20, rod a-6, node # 3**		
	@ 6.9535 (GWd/MTU)		
Isotopes	**Calculated Concentration (g/MTU)**	**Measured Concentration (g/MTU)**	**% Diff. Between Measured and Calculated**
U-234	1.378E-01	1.343E-01	2.6%
U-235	1.872E+01	1.875E+01	-0.2%
U-236	1.392E+00	1.375E+00	1.2%
U-238	9.697E+02	9.695E+02	0.0%
Pu-238	3.635E-03	3.875E-03	-6.2%
Pu-239	2.415E+00	2.432E+00	-0.7%
Pu-240	3.636E-01	3.592E-01	1.2%
Pu-241	7.543E-02	8.111E-02	-7.0%
Pu-242	6.971E-03	7.181E-03	-2.9%
Np-237	2.128E-02	4.141E-02	-48.6%
Am-241	2.128E-02	2.114E-02	0.7%
Am-242m	7.908E-05	1.003E-04	-21.2%
Cm-242	1.179E-06	1.090E-06	8.2%
Cm-244	8.610E-06	9.950E-06	-13.5%
Ru-106	8.569E-04	6.160E-04	39.1%
Cs-134	1.106E-03	1.081E-03	2.3%
Cs-137	2.300E-01	2.242E-01	2.6%
Ce-144	1.825E-03	1.021E-03	78.7%
Nd-143	2.352E-01	2.346E-01	0.3%
Nd-144	2.500E-01	2.521E-01	-0.8%
Nd-145	1.676E-01	1.672E-01	0.2%
Nd-146	1.371E-01	1.367E-01	0.3%
Nd-148	7.780E-02	7.789E-02	-0.1%
Nd-150	3.366E-02	3.316E-02	1.5%
Eu-154	6.806E-04	6.901E-04	-1.4%
Eu-155	3.636E-04	6.536E-04	-44.4%

Source: Measured Data from Hermann and Dehart (1998, p. 116)

Table III-10. Isotopic Concentrations for JPDR Case No. 8

No. 8	**Assay a-20, rod a-6, node # 9**		
	@ 6.5125 (GWd/MTU)		
Isotopes	**Calculated Concentration (g/MTU)**	**Measured Concentration (g/MTU)**	**% Diff. Between Measured and Calculated**
U-234	1.392E-01	1.364E-01	2.1%
U-235	1.906E+01	1.909E+01	-0.2%
U-236	1.323E+00	1.314E+00	0.7%
U-238	9.701E+02	9.701E+02	0.0%
Pu-238	2.801E-03	2.969E-03	-5.7%
Pu-239	2.211E+00	2.173E+00	1.7%
Pu-240	3.190E-01	3.086E-01	3.4%
Pu-241	6.003E-02	5.974E-02	0.5%
Pu-242	5.190E-03	5.187E-03	0.1%
Np-237	1.689E-02	3.527E-02	-52.1%
Am-241	1.689E-02	1.609E-02	5.0%
Am-242m	5.891E-05	6.960E-05	-15.4%
Cm-242	8.600E-07	7.570E-07	13.6%
Cm-244	4.876E-06	5.240E-06	-6.9%
Ru-106	7.575E-04	4.830E-04	56.8%
Cs-134	9.281E-04	8.299E-04	11.8%
Cs-137	2.156E-01	2.072E-01	4.1%
Ce-144	1.723E-03	8.651E-04	99.2%
Nd-143	2.223E-01	2.237E-01	-0.6%
Nd-144	2.346E-01	2.387E-01	-1.7%
Nd-145	1.580E-01	1.586E-01	-0.4%
Nd-146	1.284E-01	1.288E-01	-0.3%
Nd-148	7.289E-02	7.298E-02	-0.1%
Nd-150	3.130E-02	3.123E-02	0.2%
Eu-154	5.660E-04	5.402E-04	4.8%
Eu-155	3.403E-04	6.037E-04	-43.6%

Source: Measured Data from Hermann and Dehart (1998, p. 116)

Table III-11. Isotopic Concentrations for JPDR Case No. 9

No. 9	**Assay a-20, rod c-3, node # 1**		
	@ 2.6463 (GWd/MTU)		
Isotopes	**Calculated Concentration (g/MTU)**	**Measured Concentration (g/MTU)**	**% Diff. Between Measured and Calculated**
U-234	1.467E-01	1.459E-01	0.5%
U-235	2.300E+01	2.318E+01	-0.8%
U-236	6.811E-01	6.905E-01	-1.4%
U-238	9.721E+02	9.718E+02	0.0%
Pu-238	4.361E-04	5.236E-04	-16.7%
Pu-239	1.277E+00	1.261E+00	1.3%
Pu-240	7.989E-02	7.798E-02	2.4%
Pu-241	8.415E-03	8.853E-03	-4.9%
Pu-242	2.656E-04	2.730E-04	-2.7%
Np-237	2.354E-03	1.430E-02	-83.5%
Am-241	2.354E-03	2.242E-03	5.0%
Am-242m	4.901E-06	5.300E-06	-7.5%
Cm-242	5.178E-08	4.780E-08	8.3%
Cm-244	5.323E-08	7.710E-08	-31.0%
Ru-106	2.337E-04	1.674E-04	39.6%
Cs-134	1.753E-04	1.624E-04	7.9%
Cs-137	8.734E-02	8.287E-02	5.4%
Ce-144	7.196E-04	3.989E-04	80.4%
Nd-143	9.553E-02	9.515E-02	0.4%
Nd-144	9.270E-02	9.270E-02	0.0%
Nd-145	6.571E-02	6.547E-02	0.4%
Nd-146	5.206E-02	5.190E-02	0.3%
Nd-148	2.974E-02	2.960E-02	0.5%
Nd-150	1.256E-02	1.260E-02	-0.3%
Eu-154	1.061E-04	1.045E-04	1.5%

Source: Measured Data from Hermann and Dehart (1998, p. 116)

Table III-12. Isotopic Concentrations for JPDR Case No. 10

No. 10	**Assay a-20, rod c-3, node # 3**		
	@ 5.0861 (GWd/MTU)		
Isotopes	**Calculated Concentration (g/MTU)**	**Measured Concentration (g/MTU)**	**% Diff. Between Measured and Calculated**
U-234	1.413E-01	1.366E-01	3.4%
U-235	2.054E+01	2.069E+01	-0.7%
U-236	1.102E+00	1.097E+00	0.4%
U-238	9.706E+02	9.702E+02	0.0%
Pu-238	1.906E-03	2.550E-03	-25.3%
Pu-239	2.076E+00	2.240E+00	-7.3%
Pu-240	2.327E-01	2.404E-01	-3.2%
Pu-241	4.120E-02	4.974E-02	-17.2%
Pu-242	2.637E-03	3.081E-03	-14.4%
Np-237	1.161E-02	3.482E-02	-66.7%
Am-241	1.161E-02	1.269E-02	-8.5%
Am-242m	3.768E-05	2.000E-05	88.4%
Cm-242	4.803E-07	5.090E-07	-5.6%
Cm-244	1.954E-06	3.420E-06	-42.9%
Ru-106	5.665E-04	4.119E-04	37.5%
Cs-134	6.274E-04	6.386E-04	-1.8%
Cs-137	1.680E-01	1.601E-01	4.9%
Ce-144	1.351E-03	7.036E-04	92.0%
Nd-143	1.767E-01	1.762E-01	0.3%
Nd-144	1.802E-01	1.801E-01	0.1%
Nd-145	1.239E-01	1.233E-01	0.5%
Nd-146	1.001E-01	1.003E-01	-0.2%
Nd-148	5.700E-02	5.696E-02	0.1%
Nd-150	2.450E-02	2.489E-02	-1.6%
Eu-154	3.846E-04	4.353E-04	-11.6%

Source: Measured Data from Hermann and Dehart (1998, p. 117)

Table III-13. Isotopic Concentrations for JPDR Case No. 11

No. 11	**Assay a-20, rod c-3, node # 5**		
	@ 6.0808 (GWd/MTU)		
Isotopes	**Calculated Concentration (g/MTU)**	**Measured Concentration (g/MTU)**	**% Diff. Between Measured and Calculated**
U-234	1.394E-01	1.335E-01	4.4%
U-235	1.956E+01	1.988E+01	-1.6%
U-236	1.259E+00	1.266E+00	-0.6%
U-238	9.701E+02	9.695E+02	0.1%
Pu-238	2.740E-03	3.710E-03	-26.1%
Pu-239	2.269E+00	2.472E+00	-8.2%
Pu-240	3.007E-01	3.143E-01	-4.3%
Pu-241	5.841E-02	7.112E-02	-17.9%
Pu-242	4.602E-03	5.311E-03	-13.3%
Np-237	1.647E-02	4.105E-02	-59.9%
Am-241	1.647E-02	1.829E-02	-10.0%
Am-242m	5.802E-05	6.400E-05	-9.3%
Cm-242	8.038E-07	8.800E-07	-8.7%
Cm-244	4.546E-06	7.260E-06	-37.4%
Ru-106	7.160E-04	5.135E-04	39.4%
Cs-134	8.660E-04	8.872E-04	-2.4%
Cs-137	2.011E-01	1.924E-01	4.5%
Ce-144	1.605E-03	8.478E-04	89.3%
Nd-143	2.083E-01	2.069E-01	0.7%
Nd-144	2.171E-01	2.164E-01	0.3%
Nd-145	1.473E-01	1.466E-01	0.5%
Nd-146	1.198E-01	1.200E-01	-0.2%
Nd-148	6.809E-02	6.814E-02	-0.1%
Nd-150	2.936E-02	2.980E-02	-1.5%
Eu-154	5.321E-04	6.120E-04	-13.1%

Source: Measured Data from Hermann and Dehart (1998, p. 118)

Table III-14. Isotopic Concentrations for JPDR Case No. 12

No. 12	**Assay a-20, rod c-3, node # 8**		
	@ 6.0433 (GWd/MTU)		
Isotopes	**Calculated Concentration (g/MTU)**	**Measured Concentration, (g/MTU)**	**% Diff. Between Measured and Calculated**
U-234	1.400E-01	1.442E-01	-2.9%
U-235	1.952E+01	1.961E+01	-0.5%
U-236	1.251E+00	1.260E+00	-0.7%
U-238	9.703E+02	9.699E+02	0.0%
Pu-238	2.396E-03	3.290E-03	-27.2%
Pu-239	2.135E+00	2.353E+00	-9.3%
Pu-240	2.866E-01	3.038E-01	-5.7%
Pu-241	5.197E-02	6.493E-02	-20.0%
Pu-242	4.111E-03	4.976E-03	-17.4%
Np-237	1.462E-02	3.798E-02	-61.5%
Am-241	1.462E-02	1.642E-02	-11.0%
Am-242m	4.948E-05	7.830E-05	-36.8%
Cm-242	6.936E-07	7.610E-07	-8.9%
Cm-244	3.419E-06	5.390E-06	-36.6%
Ru-106	6.857E-04	4.761E-04	44.0%
Cs-134	8.099E-04	7.835E-04	3.4%
Cs-137	2.000E-01	1.881E-01	6.3%
Ce-144	1.603E-03	7.976E-04	101.0%
Nd-143	2.077E-01	2.071E-01	0.3%
Nd-144	2.169E-01	2.171E-01	-0.1%
Nd-145	1.470E-01	1.466E-01	0.3%
Nd-146	1.191E-01	1.195E-01	-0.3%
Nd-148	6.766E-02	6.771E-02	-0.1%
Nd-150	2.900E-02	2.946E-02	-1.6%
Eu-154	4.938E-04	5.337E-04	-7.5%

Source: Measured Data from Hermann and Dehart (1998, p. 118)

Table III-15. Isotopic Concentrations for JPDR Case No. 13

No. 13	**Assay a-20, rod c-3, node # 10**		
	@ 5.0580 (GWd/MTU)		
Isotopes	**Calculated Concentration (g/MTU)**	**Measured Concentration (g/MTU)**	**% Diff. Between Measured and Calculated**
U-234	1.422E-01	1.454E-01	-2.2%
U-235	2.046E+01	2.055E+01	-0.4%
U-236	1.091E+00	1.094E+00	-0.3%
U-238	9.710E+02	9.707E+02	0.0%
Pu-238	1.505E-03	1.894E-03	-20.5%
Pu-239	1.864E+00	1.951E+00	-4.5%
Pu-240	2.137E-01	2.176E-01	-1.8%
Pu-241	3.337E-02	3.864E-02	-13.6%
Pu-242	2.160E-03	2.441E-03	-11.5%
Np-237	9.366E-03	2.746E-02	-65.9%
Am-241	9.366E-03	1.013E-02	-7.5%
Am-242m	2.840E-05	2.470E-05	15.0%
Cm-242	3.693E-07	3.880E-07	-4.8%
Cm-244	1.182E-06	1.640E-06	-27.9%
Ru-106	5.274E-04	3.376E-04	56.2%
Cs-134	5.601E-04	5.141E-04	8.9%
Cs-137	1.674E-01	1.572E-01	6.5%
Ce-144	1.355E-03	6.313E-04	114.6%
Nd-143	1.767E-01	1.760E-01	0.4%
Nd-144	1.808E-01	1.810E-01	-0.1%
Nd-145	1.240E-01	1.237E-01	0.2%
Nd-146	9.963E-02	9.963E-02	0.0%
Nd-148	5.668E-02	5.672E-02	-0.1%
Nd-150	2.410E-02	2.426E-02	-0.7%
Eu-154	3.399E-04	3.527E-04	-3.6%

Source: Measured Data from Hermann and Dehart (1998, p. 119)

Table III-16. Isotopic Concentrations for JPDR Case No. 14

No. 14	**Assay a-20, rod c-3, node # 12**		
	@ 2.1583 (GWd/MTU)		
Isotopes	**Calculated Concentration (g/MTU)**	**Measured Concentration (g/MTU)**	**% Diff. Between Measured and Calculated**
U-234	1.484E-01	1.510E-01	-1.7%
U-235	2.348E+01	2.354E+01	-0.3%
U-236	5.836E-01	5.843E-01	-0.1%
U-238	9.727E+02	9.724E+02	0.0%
Pu-238	2.019E-04	2.511E-04	-19.6%
Pu-239	9.316E-01	9.554E-01	-2.5%
Pu-240	4.866E-02	4.913E-02	-1.0%
Pu-241	3.539E-03	3.955E-03	-10.5%
Pu-242	9.142E-05	1.021E-04	-10.5%
Np-237	9.856E-04	9.613E-03	-89.7%
Am-241	9.856E-04	1.023E-03	-3.7%
Am-242m	1.621E-06	2.590E-06	-37.4%
Cm-242	1.668E-08	1.600E-08	4.3%
Cm-244	8.105E-09	1.920E-08	-57.8%
Ru-106	1.643E-04	1.089E-04	50.9%
Cs-134	1.007E-04	9.330E-05	7.9%
Cs-137	7.142E-02	6.825E-02	4.6%
Ce-144	5.956E-04	2.862E-04	108.1%
Nd-143	7.911E-02	7.882E-02	0.4%
Nd-144	7.611E-02	7.622E-02	-0.1%
Nd-145	5.414E-02	5.406E-02	0.1%
Nd-146	4.250E-02	4.224E-02	0.6%
Nd-148	2.426E-02	2.419E-02	0.3%
Nd-150	1.008E-02	1.013E-02	-0.5%
Eu-154	6.128E-05	6.250E-05	-2.0%

Source: Measured Data from Hermann and Dehart (1998, p. 119)

Table III-17. Isotopic Concentrations for JPDR Case No. 15

No. 15	**Assay a-20, rod e-2, node # 3**		
	@ 5.6022 (GWd/MTU)		
Isotopes	**Calculated Concentration (g/MTU)**	**Measured Concentration (g/MTU)**	**% Diff. Between Measured and Calculated**
U-234	1.402E-01	1.404E-01	-0.2%
U-235	2.005E+01	2.019E+01	-0.7%
U-236	1.185E+00	1.177E+00	0.7%
U-238	9.703E+02	9.700E+02	0.0%
Pu-238	2.415E-03	2.779E-03	-13.1%
Pu-239	2.224E+00	2.257E+00	-1.5%
Pu-240	2.711E-01	2.644E-01	2.5%
Pu-241	5.163E-02	5.623E-02	-8.2%
Pu-242	3.681E-03	3.793E-03	-3.0%
Np-237	1.457E-02	3.579E-02	-59.3%
Am-241	1.457E-02	1.424E-02	2.3%
Am-242m	5.014E-05	3.680E-05	36.3%
Cm-242	6.639E-07	5.950E-07	11.6%
Cm-244	3.362E-06	4.060E-06	-17.2%
Ru-106	6.505E-04	4.540E-04	43.3%
Cs-134	7.611E-04	7.320E-04	4.0%
Cs-137	1.851E-01	1.781E-01	3.9%
Ce-144	1.480E-03	7.915E-04	87.0%
Nd-143	1.931E-01	1.926E-01	0.3%
Nd-144	1.989E-01	1.998E-01	-0.5%
Nd-145	1.359E-01	1.355E-01	0.3%
Nd-146	1.103E-01	1.105E-01	-0.2%
Nd-148	6.276E-02	6.273E-02	0.0%
Nd-150	2.708E-02	2.718E-02	-0.4%
Eu-154	4.686E-04	4.964E-04	-5.6%
Eu-155	3.016E-04	5.319E-04	-43.3%

Source: Measured Data from Hermann and Dehart (1998, p. 120)

Table III-18. Isotopic Concentrations for JPDR Case No. 16

No. 16	**Assay a-20, rod e-2, node # 10**		
	@ 5.3770 (GWd/MTU)		
Isotopes	**Calculated Concentration (g/MTU)**	**Measured Concentration (g/MTU)**	**% Diff. Between Measured and Calculated**
U-234	1.415E-01	1.415E-01	0.0%
U-235	2.015E+01	2.015E+01	0.0%
U-236	1.143E+00	1.162E+00	-1.6%
U-238	9.708E+02	9.706E+02	0.0%
Pu-238	1.750E-03	2.103E-03	-16.8%
Pu-239	1.947E+00	1.964E+00	-0.9%
Pu-240	2.360E-01	2.353E-01	0.3%
Pu-241	3.865E-02	4.248E-02	-9.0%
Pu-242	2.681E-03	2.866E-03	-6.5%
Np-237	1.086E-02	3.021E-02	-64.1%
Am-241	1.086E-02	1.124E-02	-3.4%
Am-242m	3.414E-05	3.310E-05	3.1%
Cm-242	4.554E-07	4.380E-07	4.0%
Cm-244	1.675E-06	2.260E-06	-25.9%
Ru-106	5.755E-04	3.698E-04	55.6%
Cs-134	6.333E-04	5.844E-04	8.4%
Cs-137	1.780E-01	1.712E-01	4.0%
Ce-144	1.436E-03	7.055E-04	103.5%
Nd-143	1.869E-01	1.871E-01	-0.1%
Nd-144	1.925E-01	1.949E-01	-1.2%
Nd-145	1.315E-01	1.312E-01	0.2%
Nd-146	1.059E-01	1.061E-01	-0.2%
Nd-148	6.024E-02	6.029E-02	-0.1%
Nd-150	2.567E-02	2.580E-02	-0.5%
Eu-154	3.848E-04	3.943E-04	-2.4%
Eu-155	2.884E-04	5.033E-04	-42.7%

Source: Measured Data from Hermann and Dehart (1998, p. 120)

INTENTIONALLY LEFT BLANK

ATTACHMENT IV
44-BWR Waste Package

INTENTIONALLY LEFT BLANK

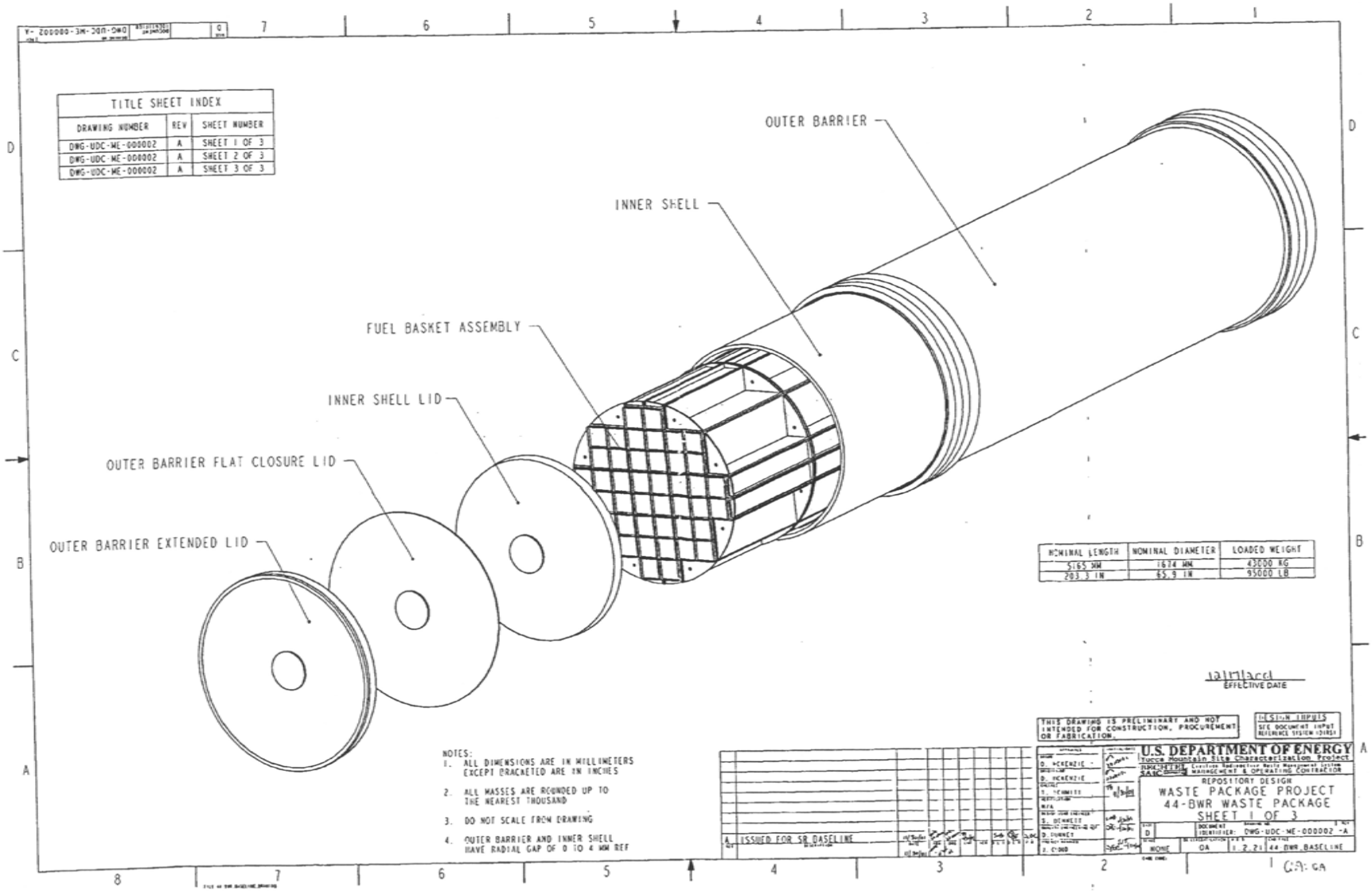

TITLE SHEET INDEX		
DRAWING NUMBER	REV	SHEET NUMBER
DWG-UDC-ME-000002	A	SHEET 1 OF 3
DWG-UDC-ME-000002	A	SHEET 2 OF 3
DWG-UDC-ME-000002	A	SHEET 3 OF 3

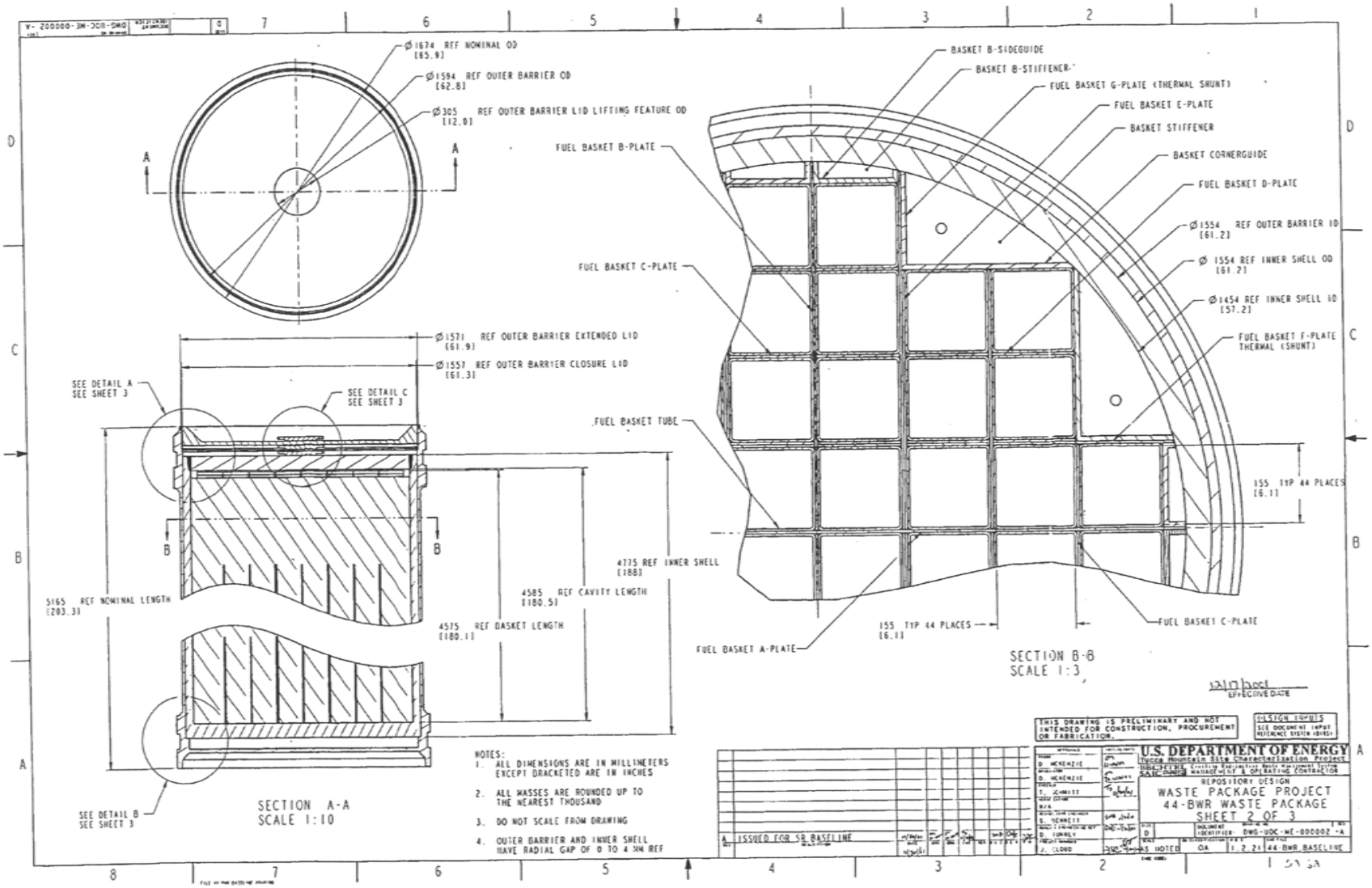
Ø1674 REF NOMINAL OD [65.9]
Ø1594 REF OUTER BARRIER OD [62.8]
Ø305 REF OUTER BARRIER LID LIFTING FEATURE OD [12.0]
Ø1571 REF OUTER BARRIER EXTENDED LID [61.9]
Ø1557 REF OUTER BARRIER CLOSURE LID [61.3]
SEE DETAIL A SEE SHEET 3
SEE DETAIL C SEE SHEET 3
SEE DETAIL B SEE SHEET 3
5165 REF NOMINAL LENGTH [203.3]
4575 REF BASKET LENGTH [180.1]
4585 REF CAVITY LENGTH [180.5]
4775 REF INNER SHELL [188]
SECTION A-A
SCALE 1:10
BASKET B-SIDEGUIDE
BASKET B-STIFFENER
FUEL BASKET G-PLATE (THERMAL SHUNT)
FUEL BASKET E-PLATE
BASKET STIFFENER
BASKET CORNERGUIDE
FUEL BASKET D-PLATE
FUEL BASKET B-PLATE
FUEL BASKET C-PLATE
FUEL BASKET TUBE
FUEL BASKET A-PLATE
Ø1554 REF OUTER BARRIER ID [61.2]
Ø1554 REF INNER SHELL OD [61.2]
Ø1454 REF INNER SHELL ID [57.2]
FUEL BASKET F-PLATE THERMAL (SHUNT)
155 TYP 44 PLACES [6.1]
SECTION B-B
SCALE 1:3
EFFECTIVE DATE
THIS DRAWING IS PRELIMINARY AND NOT INTENDED FOR CONSTRUCTION, PROCUREMENT OR FABRICATION.
DESIGN INPUTS
SEE DOCUMENT INPUT REFERENCE SYSTEM (DIRS)
NOTES:
1. ALL DIMENSIONS ARE IN MILLIMETERS EXCEPT BRACKETED ARE IN INCHES
2. ALL MASSES ARE ROUNDED UP TO THE NEAREST THOUSAND
3. DO NOT SCALE FROM DRAWING
4. OUTER BARRIER AND INNER SHELL HAVE RADIAL GAP OF 0 TO 4 MM REF
A ISSUED FOR SR BASELINE
U.S. DEPARTMENT OF ENERGY
Yucca Mountain Site Characterization Project
REPOSITORY DESIGN
WASTE PACKAGE PROJECT
44-BWR WASTE PACKAGE
SHEET 2 OF 3
DWG-UDC-WE-000002 -A
44-BWR BASELINE

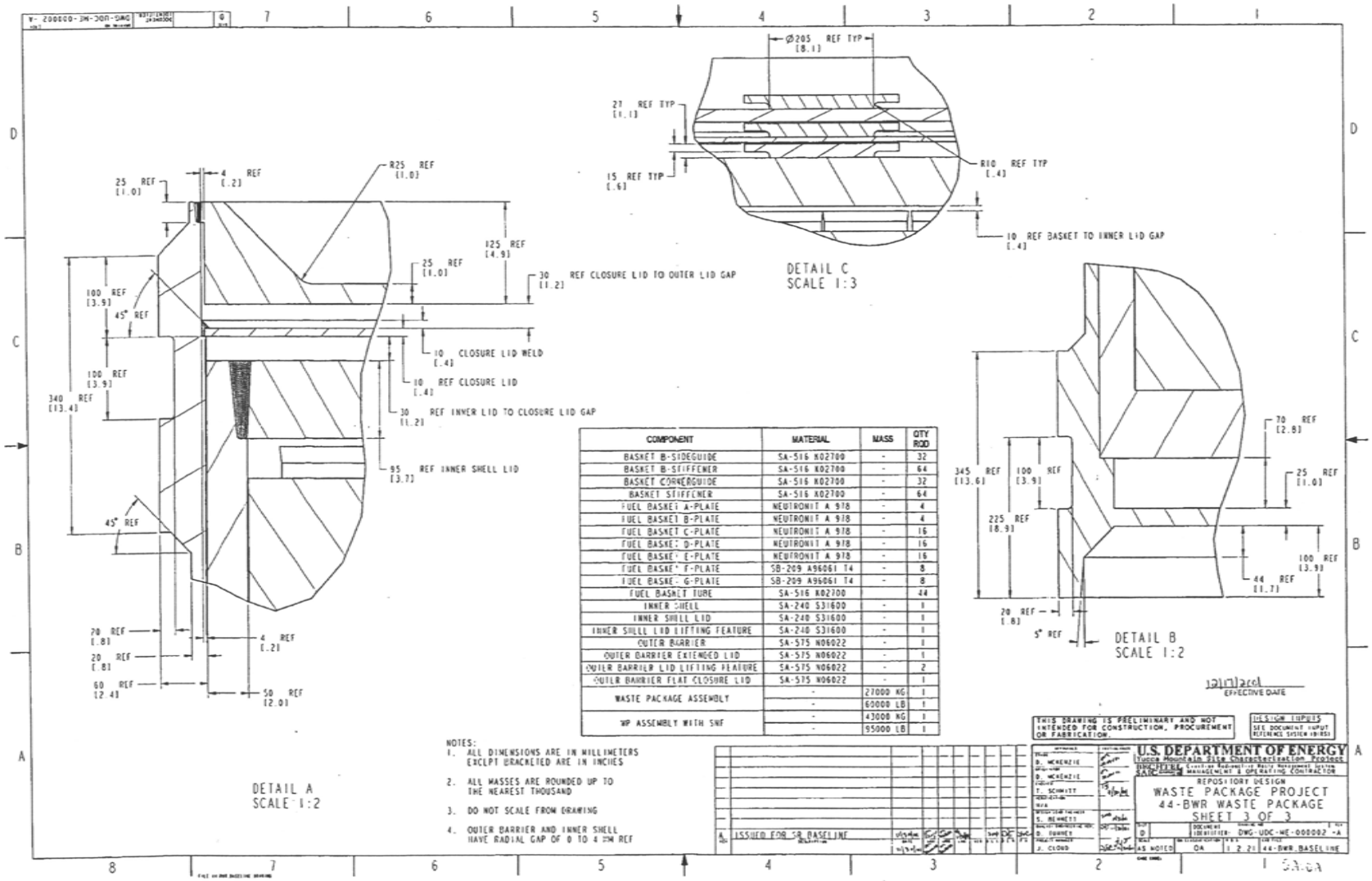

COMPONENT	MATERIAL	MASS	QTY ROD
BASKET B-SIDEGUIDE	SA-516 K02700	-	32
BASKET B-STIFFENER	SA-516 K02700	-	64
BASKET CORNERGUIDE	SA-516 K02700	-	32
BASKET STIFFENER	SA-516 K02700	-	64
FUEL BASKET A-PLATE	NEUTRONIT A 978	-	4
FUEL BASKET B-PLATE	NEUTRONIT A 978	-	4
FUEL BASKET C-PLATE	NEUTRONIT A 978	-	16
FUEL BASKET D-PLATE	NEUTRONIT A 978	-	16
FUEL BASKET E-PLATE	NEUTRONIT A 978	-	16
FUEL BASKET F-PLATE	SB-209 A96061 T4	-	8
FUEL BASKET G-PLATE	SB-209 A96061 T4	-	8
FUEL BASKET TUBE	SA-516 K02700		44
INNER SHELL	SA-240 S31600	-	1
INNER SHELL LID	SA-240 S31600	-	1
INNER SHELL LID LIFTING FEATURE	SA-240 S31600	-	1
OUTER BARRIER	SA-575 N06022	-	1
OUTER BARRIER EXTENDED LID	SA-575 N06022	-	1
OUTER BARRIER LID LIFTING FEATURE	SA-575 N06022	-	2
OUTER BARRIER FLAT CLOSURE LID	SA-575 N06022	-	1
WASTE PACKAGE ASSEMBLY	-	27000 KG	1
	-	60000 LB	1
WP ASSEMBLY WITH SNF	-	43000 KG	1
	-	95000 LB	1

ATTACHMENT V
MCNP Input Development

Some manipulation of the SAS2H output data was required to develop the inputs for MCNP.

1. Not all isotopes were available in the cross section libraries, BSC (2003a) did not utilize all available libraries.
2. In the Cooper data, curium isotopes were measured in total and could not be used.
3. The MCNP inputs are normalized, such that the sum of all the input values is 100.

Equation 6 projects the expected oxygen content in the SNF, based on the initial oxygen content in the UO_2 pellet. The initial oxygen weight percent is a straightforward calculation from the initial enrichment and density of the pellet for each reactor set and was found to be 11.85 weight percent in Table 5-14.

With a projection of the oxygen concentration and the sum of the concentrations of each isotope of interest from SAS2H, the normalized MCNP input values are then scaled with Equation 7.

When scaled properly the sum of all the MCNP inputs is 100, as demonstrated in the tables below. The MCNP code then calculates the individual number densities from the fractional input and the material density. The initial fuel density was used in every case.

The Cooper and Gundremmingen sets contain isotopic species with RCA units reported in terms of activity, Curies per gram (Ci/gm). For comparison, Attachments II and III converted the SAS2H calculated concentrations to the activity units with the specific activity given in Equation 4. However, for use in the MCNP code the measured activity values must be converted over to units of concentration (g/MTU). Equation V-1 converts the activity units into equivalent concentration units.

$$\text{Concentration (g/MTU)} = 1000 * \frac{A_{RCA}\,(\text{Ci/gram})}{\text{Specific Activity}} \qquad \text{(Eq. V-1)}$$

where

A_{RCA} = Activity measurement reported in (Ci/gram) from Radio-Chemical Assay
Specific Activity = Activity per unit mass of a radioactive source

The affected isotopes from Cooper are Np-237, Am-241, Cs-135, Cs-137, and Tc-99; the specific activities are given in Table I-3. The affected isotopes from Gundremmingen are Eu-154 and Cs-137, the specific activities are provided in Table II-3.

Tables V-1 through 15 present the SAS2H calculated concentrations and RCA concentrations, tying the information to both the source file/material and the corresponding input file. MCNP input values are calculated based on the above procedure. MCNP isotopic designations are also provided for convenience.

Table V-1. Cooper Case No. 1 & 2 MCNP Input Development

Cooper BWR		**Source File:**	**Input File:**	**Source: ORNL/TM-13315**	**Input File:**	**Source File:**	**Input File:**	**Source: ORNL/TM-13315**	**Input File:**
		N01	**C1-S**	**p. 105**	**C1-M**	**N02**	**C2-S**	**p. 105**	**C2-M**
MCNP Designations	**Isotopes**	**Calculated Concentration (g/MTUO2)**	**MCNP Input Values**	**Measured Value (g/MTUO2)**	**MCNP Input Values**	**Calculated Concentration (g/MTUO2)**	**MCNP Input Values**	**Measured Value (g/MTUO2)**	**MCNP Input Values**
92234.50c	**U-234**	1.696E-01	1.728E-02	1.700E-01	1.732E-02	1.393E-01	1.439E-02	1.350E-01	1.395E-02
92235.50c	**U-235**	1.176E+01	1.198E+00	1.191E+01	1.213E+00	5.326E+00	5.503E-01	5.340E+00	5.517E-01
92236.50c	**U-236**	2.612E+00	2.660E-01	2.630E+00	2.679E-01	3.478E+00	3.593E-01	3.530E+00	3.647E-01
92238.50c	**U-238**	8.433E+02	8.591E+01	8.437E+02	8.594E+01	8.342E+02	8.619E+01	8.346E+02	8.623E+01
94238.50c	**Pu-238**	5.308E-02	5.407E-03	5.350E-02	5.450E-03	1.629E-01	1.683E-02	1.743E-01	1.801E-02
94239.55c	**Pu-239**	3.983E+00	4.057E-01	3.738E+00	3.808E-01	3.913E+00	4.043E-01	3.579E+00	3.698E-01
94240.50c	**Pu-240**	1.248E+00	1.271E-01	1.220E+00	1.243E-01	2.089E+00	2.159E-01	2.216E+00	2.290E-01
94241.50c	**Pu-241**	3.995E-01	4.070E-02	3.403E-01	3.466E-02	6.907E-01	7.137E-02	6.390E-01	6.602E-02
94242.50c	**Pu-242**	1.216E-01	1.239E-02	9.892E-02	1.008E-02	4.672E-01	4.827E-02	4.407E-01	4.553E-02
93237.50c	**Np-237**	1.848E-01	1.882E-02	1.578E-01	1.607E-02	3.453E-01	3.568E-02	3.611E-01	3.731E-02
95241.50c	**Am-241**	1.944E-01	1.981E-02	1.510E-01	1.538E-02	3.097E-01	3.200E-02	2.559E-01	2.644E-02
55135.60c	Cs-135	3.589E-01	3.656E-02	3.246E-01	3.306E-02	4.222E-01	4.362E-02	3.871E-01	3.999E-02
55137.60c	Cs-137	5.086E-01	5.181E-02	4.938E-01	5.030E-02	8.899E-01	9.195E-02	8.651E-01	8.938E-02
43099.50c	**Tc-99**	4.181E-01	4.259E-02	3.656E-01	3.724E-02	6.930E-01	7.161E-02	6.016E-01	6.215E-02
	Sub-Total	8.653E+02		8.654E+02		8.531E+02		8.531E+02	
8016.50c	Oxygen	1.163E+02	1.185E+01	116.3294307	1.185E+01	114.6856416	1.185E+01	114.6855107	1.185E+01
	Total	9.817E+02	1.000E+02	9.817E+02	1.000E+02	9.678E+02	1.000E+02	9.678E+02	9.999E+01

Table V-2. Cooper Case No. 3 & 4 MCNP Input Development

Cooper BWR		Source File:	Input File:	Source: ORNL/TM-13315	Input File:	Source File:	Input File:	Source: ORNL/TM-13315	Input File:
		N03	C3-S	p. 106	C3-M	N04	C4-S	p. 106	C4-M
MCNP Designations	Isotopes	Calculated Concentration (g/MTUO2)	MCNP Input Values	Measured Value (g/MTUO2)	MCNP Input Values	Calculated Concentration (g/MTUO2)	MCNP Input Values	Measured Value (g/MTUO2)	MCNP Input Values
92234.50c	**U-234**	1.383E-01	1.430E-02	1.440E-01	1.483E-02	1.725E-01	1.755E-02	1.740E-01	1.748E-02
92235.50c	**U-235**	4.715E+00	4.876E-01	4.830E+00	4.974E-01	1.237E+01	1.258E+00	1.300E+01	1.306E+00
92236.50c	**U-236**	3.520E+00	3.640E-01	3.630E+00	3.738E-01	2.513E+00	2.558E-01	2.480E+00	2.492E-01
92238.50c	**U-238**	8.344E+02	8.628E+01	8.381E+02	8.630E+01	8.441E+02	8.589E+01	8.545E+02	8.584E+01
94238.50c	**Pu-238**	1.593E-01	1.647E-02	1.706E-01	1.757E-02	4.602E-02	4.683E-03	5.210E-02	5.234E-03
94239.55c	**Pu-239**	3.611E+00	3.734E-01	3.336E+00	3.435E-01	3.909E+00	3.978E-01	4.056E+00	4.075E-01
94240.50c	**Pu-240**	2.083E+00	2.154E-01	2.190E+00	2.255E-01	1.163E+00	1.184E-01	1.184E+00	1.190E-01
94241.50c	**Pu-241**	6.594E-01	6.819E-02	6.201E-01	6.388E-02	3.678E-01	3.743E-02	3.415E-01	3.431E-02
94242.50c	**Pu-242**	4.966E-01	5.135E-02	4.737E-01	4.878E-02	1.038E-01	1.056E-02	8.742E-02	8.783E-03
93237.50c	**Np-237**	3.374E-01	3.489E-02	3.497E-01	3.601E-02	1.703E-01	1.733E-02	1.550E-01	1.557E-02
95241.50c	**Am-241**	2.918E-01	3.017E-02	2.442E-01	2.515E-02	1.781E-01	1.812E-02	1.524E-01	1.531E-02
55135.60c	Cs-135	4.060E-01	4.199E-02	3.723E-01	3.834E-02	3.478E-01	3.539E-02	3.324E-01	3.340E-02
55137.60c	Cs-137	9.125E-01	9.436E-02	8.905E-01	9.170E-02	4.793E-01	4.877E-02	4.684E-01	4.706E-02
43099.50c	**Tc-99**	7.110E-01	7.352E-02	6.191E-01	6.375E-02	3.952E-01	4.021E-02	3.604E-01	3.620E-02
	Sub-Total	8.524E+02		8.560E+02		8.663E+02		8.773E+02	
8016.50c	Oxygen	114.5881732	1.185E+01	115.06804	1.185E+01	116.4541569	1.185E+01	117.941249	1.185E+01
	Total	9.670E+02	1.000E+02	9.710E+02	9.999E+01	9.827E+02	1.000E+02	9.953E+02	9.999E+01

Table VI-3. Cooper Case No. 5 & 6 MCNP Input Development

Cooper BWR		Source File:	Input File:	Source: ORNL/TM-13315	Input File:	Source File:	Input File:	Source: ORNL/TM-13315	Input File:
		N05	C5-S	p. 107	C5-M	N06	C6-S	p. 107	C6-M
MCNP Designations	Isotopes	Calculated Concentration (g/MTUO2)	MCNP Input Values	Measured Value (g/MTUO2)	MCNP Input Values	Calculated Concentration (g/MTUO2)	MCNP Input Values	Measured Value (g/MTUO2)	MCNP Input Values
92234.50c	**U-234**	1.461E-01	1.503E-02	1.460E-01	1.478E-02	1.448E-01	1.493E-02	1.540E-01	1.570E-02
92235.50c	**U-235**	7.036E+00	7.241E-01	7.760E+00	7.857E-01	5.554E+00	5.727E-01	6.280E+00	6.402E-01
92236.50c	**U-236**	3.299E+00	3.395E-01	3.360E+00	3.402E-01	3.410E+00	3.517E-01	3.480E+00	3.548E-01
92238.50c	**U-238**	8.363E+02	8.607E+01	8.490E+02	8.596E+01	8.367E+02	8.628E+01	8.455E+02	8.619E+01
94238.50c	**Pu-238**	1.359E-01	1.399E-02	1.460E-01	1.478E-02	1.296E-01	1.336E-02	1.389E-01	1.416E-02
94239.55c	**Pu-239**	4.230E+00	4.353E-01	4.526E+00	4.583E-01	3.524E+00	3.634E-01	3.668E+00	3.739E-01
94240.50c	**Pu-240**	1.927E+00	1.983E-01	2.164E+00	2.191E-01	1.926E+00	1.986E-01	2.082E+00	2.122E-01
94241.50c	**Pu-241**	6.601E-01	6.793E-02	6.649E-01	6.732E-02	6.002E-01	6.188E-02	6.139E-01	6.258E-02
94242.50c	**Pu-242**	3.490E-01	3.591E-02	3.247E-01	3.288E-02	4.035E-01	4.160E-02	3.823E-01	3.897E-02
93237.50c	**Np-237**	3.143E-01	3.235E-02	3.341E-01	3.383E-02	2.983E-01	3.076E-02	3.355E-01	3.420E-02
95241.50c	**Am-241**	3.015E-01	3.102E-02	2.757E-01	2.791E-02	2.674E-01	2.757E-02	2.532E-01	2.582E-02
55135.60c	Cs-135	4.258E-01	4.382E-02	4.539E-01	4.596E-02	3.923E-01	4.046E-02	3.741E-01	3.814E-02
55137.60c	Cs-137	7.856E-01	8.085E-02	8.385E-01	8.490E-02	8.363E-01	8.623E-02	7.922E-01	8.076E-02
43099.50c	**Tc-99**	6.183E-01	6.363E-02	5.759E-01	5.831E-02	6.597E-01	6.803E-02	5.840E-01	5.954E-02
	Sub-Total	8.565E+02		8.706E+02		8.549E+02		8.646E+02	
8016.50c	Oxygen	115.1444752	1.185E+01	117.030633	1.185E+01	114.9196788	1.185E+01	116.233268	1.185E+01
	Total	9.717E+02	1.000E+02	9.876E+02	9.999E+01	9.698E+02	1.000E+02	9.809E+02	9.999E+01

Table V-4. Gundremmingen Case No. 1 & 2 MCNP Input Development

Gundremmingen BWR		Source File:	Input File:	Source: ORNL/TM-13315	Input File:	Source File:	Input File:	Source: ORNL/TM-13315	Input File:
		N01	G1-S	p. 109[a]	G1-M	N02	G2-S	p. 109[a]	G2-M
MCNP Designations	Isotopes	Calculated Concentration (g/MTUO2)	MCNP Input Values	Measured Value (g/MTUO2)	MCNP Input Values	Calculated Concentration (g/MTUO2)	MCNP Input Values	Measured Value (g/MTUO2)	MCNP Input Values
92235.50c	**U-235**	6.058E+00	5.481E-01	6.307E+00	5.710E-01	6.429E+00	5.828E-01	6.741E+00	6.116E-01
92236.50c	**U-236**	3.201E+00	2.896E-01	3.280E+00	2.969E-01	3.251E+00	2.947E-01	3.294E+00	2.989E-01
92238.50c	**U-238**	9.568E+02	8.658E+01	9.561E+02	8.656E+01	9.532E+02	8.640E+01	9.519E+02	8.636E+01
94238.50c	**Pu-238**	8.126E-02	7.353E-03	6.800E-02	6.156E-03	1.168E-01	1.059E-02	1.080E-01	9.799E-03
94239.55c	**Pu-239**	3.800E+00	3.438E-01	3.736E+00	3.382E-01	4.747E+00	4.303E-01	4.800E+00	4.355E-01
94240.50c	**Pu-240**	1.943E+00	1.758E-01	1.815E+00	1.643E-01	2.187E+00	1.983E-01	2.168E+00	1.967E-01
94241.50c	**Pu-241**	6.864E-01	6.211E-02	7.052E-01	6.384E-02	8.617E-01	7.810E-02	9.540E-01	8.655E-02
94242.50c	**Pu-242**	3.505E-01	3.171E-02	3.305E-01	2.992E-02	3.945E-01	3.575E-02	4.494E-01	4.077E-02
96244.50c	Cm-244	9.270E-03	8.389E-04	8.868E-03	8.028E-04	1.816E-02	1.646E-03	1.977E-02	1.794E-03
63154.50c	Eu-154	9.938E-03	8.992E-04	1.371E-02	1.241E-03	1.370E-02	1.242E-03	1.371E-02	1.244E-03
60148.50c	Nd-148	2.842E-01	2.572E-02	2.899E-01	2.624E-02	3.025E-01	2.742E-02	3.088E-01	2.802E-02
55134.60c	Cs-134	2.342E-02	2.119E-03	2.677E-02	2.423E-03	2.863E-02	2.595E-03	2.492E-02	2.261E-03
55137.60c	Cs-137	8.935E-01	8.085E-02	1.034E+00	9.362E-02	9.479E-01	8.592E-02	8.132E-01	7.378E-02
	Sub-Total	9.741E+02		9.737E+02		9.725E+02		9.716E+02	
8016.50c	Oxygen	1.310E+02	1.185E+01	1.309E+02	1.185E+01	1.307E+02	1.185E+01	1.306E+02	1.185E+01
	Total	1.105E+03	1.000E+02	1.105E+03	1.000E+02	1.103E+03	1.000E+02	1.102E+03	1.000E+02

Note: [a] Cases published in reference are in reversed order.

Table V-5. Gundremmingen Case No. 3 & 4 MCNP Input Development

Gundremmingen BWR		Source File:	Input File:	Source: ORNL/TM-13315	Input File:	Source File:	Input File:	Source: ORNL/TM-13315	Input File:
		N03	G3-S	p. 110	G3-M	N04	G4-S	p. 110	G4-M
MCNP Designations	Isotopes	Calculated Concentration (g/MTUO2)	MCNP Input Values	Measured Value (g/MTUO2)	MCNP Input Values	Calculated Concentration (g/MTUO2)	MCNP Input Values	Measured Value (g/MTUO2)	MCNP Input Values
92235.50c	**U-235**	9.076E+00	8.174E-01	9.823E+00	8.854E-01	8.017E+00	7.238E-01	8.618E+00	7.790E-01
92236.50c	**U-236**	2.884E+00	2.598E-01	2.952E+00	2.661E-01	3.037E+00	2.742E-01	3.133E+00	2.832E-01
92238.50c	**U-238**	9.585E+02	8.633E+01	9.559E+02	8.616E+01	9.566E+02	8.636E+01	9.547E+02	8.629E+01
94238.50c	**Pu-238**	6.786E-02	6.112E-03	8.300E-02	7.481E-03	8.429E-02	7.610E-03	8.400E-02	7.592E-03
94239.55c	**Pu-239**	4.545E+00	4.094E-01	5.372E+00	4.842E-01	4.639E+00	4.188E-01	4.820E+00	4.357E-01
94240.50c	**Pu-240**	1.711E+00	1.541E-01	1.855E+00	1.672E-01	1.896E+00	1.712E-01	1.845E+00	1.668E-01
94241.50c	**Pu-241**	6.610E-01	5.954E-02	7.855E-01	7.080E-02	7.192E-01	6.493E-02	7.276E-01	6.577E-02
94242.50c	**Pu-242**	2.186E-01	1.969E-02	2.232E-01	2.012E-02	2.782E-01	2.512E-02	2.461E-01	2.224E-02
96244.50c	Cm-244	5.778E-03	5.205E-04	8.622E-03	7.771E-04	8.983E-03	8.110E-04	9.176E-03	8.294E-04
63154.50c	Eu-154	8.774E-03	7.902E-04	1.201E-02	1.082E-03	1.004E-02	9.064E-04	1.122E-02	1.015E-03
60148.50c	Nd-148	2.351E-01	2.117E-02	2.394E-01	2.158E-02	2.599E-01	2.347E-02	2.717E-01	2.456E-02
55134.60c	Cs-134	1.821E-02	1.640E-03	2.046E-02	1.844E-03	1.788E-02	1.614E-03	1.919E-02	1.734E-03
55137.60c	Cs-137	7.368E-01	6.636E-02	7.500E-01	6.760E-02	8.036E-01	7.255E-02	7.679E-01	6.941E-02
	Sub-Total	9.787E+02		9.780E+02		9.764E+02		9.753E+02	
8016.50c	Oxygen	1.316E+02	1.185E+01	1.315E+02	1.185E+01	1.313E+02	1.185E+01	1.311E+02	1.185E+01
	Total	1.110E+03	1.000E+02	1.109E+03	1.000E+02	1.108E+03	1.000E+02	1.106E+03	1.000E+02

Table V-6. Gundremmingen Case No. 5 & 6 MCNP Input Development

Gundremmingen BWR		Source File:	Input File:	Source: ORNL/TM-13315	Input File:	Source File:	Input File:	Source: ORNL/TM-13315	Input File:
		N05	G5-S	p. 111[a]	G5-M	N06	G6-S	p. 111[a]	G6-M
MCNP Designations	Isotopes	Calculated Concentration (g/MTUO2)	MCNP Input Values	Measured Value (g/MTUO2)	MCNP Input Values	Calculated Concentration (g/MTUO2)	MCNP Input Values	Measured Value (g/MTUO2)	MCNP Input Values
92235.50c	**U-235**	8.603E+00	7.748E-01	8.588E+00	7.731E-01	9.558E+00	8.605E-01	9.803E+00	8.821E-01
92236.50c	**U-236**	2.839E+00	2.557E-01	3.077E+00	2.770E-01	2.779E+00	2.501E-01	2.901E+00	2.610E-01
92238.50c	**U-238**	9.604E+02	8.650E+01	9.607E+02	8.649E+01	9.593E+02	8.636E+01	9.591E+02	8.630E+01
94238.50c	**Pu-238**	4.422E-02	3.982E-03	3.600E-02	3.241E-03	5.216E-02	4.696E-03	4.800E-02	4.319E-03
94239.55c	**Pu-239**	3.676E+00	3.311E-01	3.635E+00	3.272E-01	4.279E+00	3.852E-01	4.418E+00	3.975E-01
94240.50c	**Pu-240**	1.519E+00	1.368E-01	1.472E+00	1.325E-01	1.553E+00	1.398E-01	1.533E+00	1.379E-01
94241.50c	**Pu-241**	5.250E-01	4.728E-02	5.205E-01	4.686E-02	5.895E-01	5.307E-02	6.501E-01	5.850E-02
94242.50c	**Pu-242**	1.920E-01	1.729E-02	1.820E-01	1.638E-02	1.870E-01	1.684E-02	2.013E-01	1.811E-02
96244.50c	Cm-244	2.767E-03	2.492E-04	2.614E-03	2.353E-04	3.738E-03	3.365E-04	4.480E-03	4.031E-04
63154.50c	Eu-154	6.181E-03	5.567E-04	6.572E-03	5.917E-04	7.062E-03	6.357E-04	8.044E-03	7.238E-04
60148.50c	Nd-148	2.249E-01	2.026E-02	2.268E-01	2.042E-02	2.200E-01	1.981E-02	2.217E-01	1.995E-02
55134.60c	Cs-134	1.342E-02	1.209E-03	1.457E-02	1.312E-03	1.401E-02	1.261E-03	1.833E-02	1.649E-03
55137.60c	Cs-137	7.047E-01	6.347E-02	7.166E-01	6.451E-02	6.872E-01	6.186E-02	7.555E-01	6.798E-02
	Sub-Total	9.787E+02		9.792E+02		9.792E+02		9.797E+02	
8016.50c	Oxygen	1.316E+02	1.185E+01	1.316E+02	1.185E+01	1.316E+02	1.185E+01	1.317E+02	1.185E+01
	Total	1.110E+03	1.000E+02	1.111E+03	1.000E+02	1.111E+03	1.000E+02	1.111E+03	1.000E+02

Note: [a] Cases published in reference are in reversed order.

Table V-7. Gundremmingen Case No. 7 & 8 MCNP Input Development

Gundremmingen BWR		Source File:	Input File:	Source: ORNL/TM-13315	Input File:	Source File:	Input File:	Source: ORNL/TM-13315	Input File:
		N07	G7-S	p. 112	G7-M	N08	G8-S	p. 112	G8-M
MCNP Designations	Isotopes	Calculated Concentration (g/MTUO2)	MCNP Input Values	Measured Value (g/MTUO2)	MCNP Input Values	Calculated Concentration (g/MTUO2)	MCNP Input Values	Measured Value (g/MTUO2)	MCNP Input Values
92235.50c	**U-235**	1.277E+01	1.143E+00	1.311E+01	1.173E+00	1.086E+01	9.756E-01	1.044E+01	9.376E-01
92236.50c	**U-236**	2.281E+00	2.041E-01	2.452E+00	2.195E-01	2.581E+00	2.318E-01	2.740E+00	2.461E-01
92238.50c	**U-238**	9.635E+02	8.625E+01	9.621E+02	8.611E+01	9.611E+02	8.631E+01	9.612E+02	8.632E+01
94238.50c	**Pu-238**	2.510E-02	2.247E-03	3.300E-02	2.954E-03	3.935E-02	3.534E-03	4.100E-02	3.682E-03
94239.55c	**Pu-239**	3.889E+00	3.481E-01	4.695E+00	4.202E-01	4.143E+00	3.721E-01	4.157E+00	3.733E-01
94240.50c	**Pu-240**	1.079E+00	9.661E-02	1.170E+00	1.047E-01	1.354E+00	1.215E-01	1.442E+00	1.295E-01
94241.50c	**Pu-241**	3.867E-01	3.461E-02	4.807E-01	4.303E-02	5.160E-01	4.633E-02	5.328E-01	4.785E-02
94242.50c	**Pu-242**	8.070E-02	7.224E-03	8.897E-02	7.963E-03	1.355E-01	1.216E-02	1.500E-01	1.347E-02
96244.50c	Cm-244	7.960E-04	7.126E-05	1.569E-03	1.404E-04	2.087E-03	1.874E-04	2.794E-03	2.509E-04
63154.50c	Eu-154	3.933E-03	3.521E-04	5.799E-03	5.191E-04	5.845E-03	5.249E-04	6.554E-03	5.886E-04
60148.50c	Nd-148	1.598E-01	1.431E-02	1.632E-01	1.461E-02	1.940E-01	1.742E-02	1.989E-01	1.786E-02
55134.60c	Cs-134	8.812E-03	7.889E-04	1.112E-02	9.955E-04	1.363E-02	1.224E-03	1.313E-02	1.179E-03
55137.60c	Cs-137	5.037E-01	4.509E-02	5.344E-01	4.784E-02	6.146E-01	5.519E-02	6.061E-01	5.444E-02
	Sub-Total	9.847E+02		9.848E+02		9.816E+02		9.815E+02	
8016.50c	Oxygen	1.324E+02	1.185E+01	1.324E+02	1.185E+01	1.320E+02	1.185E+01	1.319E+02	1.185E+01
	Total	1.117E+03	1.000E+02	1.117E+03	1.000E+02	1.114E+03	1.000E+02	1.113E+03	1.000E+02

Table V-8. JPDR Case No. 1 & 2 MCNP Input Development

JPDR BWR		Source File:	Input File:	Source: ORNL/TM-13315	Input File:	Source File:	Input File:	Source: ORNL/TM-13315	Input File:
		N01	J1-S	p. 113	J1-M	N02	J2-S	p. 113	J2-M
MCNP Designations	Isotopes	Calculated Concentration (g/MTUO2)	MCNP Input Values	Measured Value (g/MTUO2)	MCNP Input Values	Calculated Concentration (g/MTUO2)	MCNP Input Values	Measured Value (g/MTUO2)	MCNP Input Values
92234.50c	**U-234**	1.455E-01	1.286E-02	1.468E-01	1.298E-02	1.443E-01	1.277E-02	1.417E-01	1.254E-02
92235.50c	**U-235**	2.229E+01	1.971E+00	2.252E+01	1.991E+00	2.149E+01	1.901E+00	2.154E+01	1.906E+00
92236.50c	**U-236**	7.964E-01	7.042E-02	7.973E-01	7.050E-02	9.195E-01	8.135E-02	9.119E-01	8.069E-02
92238.50c	**U-238**	9.718E+02	8.593E+01	9.714E+02	8.590E+01	9.716E+02	8.596E+01	9.713E+02	8.595E+01
94238.50c	**Pu-238**	6.493E-04	5.740E-05	8.437E-04	7.460E-05	8.757E-04	7.748E-05	1.088E-03	9.628E-05
94239.55c	**Pu-239**	1.453E+00	1.285E-01	1.531E+00	1.354E-01	1.574E+00	1.392E-01	1.647E+00	1.457E-01
94240.50c	**Pu-240**	1.118E-01	9.886E-03	1.136E-01	1.005E-02	1.469E-01	1.300E-02	1.510E-01	1.336E-02
94241.50c	**Pu-241**	1.402E-02	1.240E-03	1.570E-02	1.388E-03	1.985E-02	1.756E-03	2.145E-02	1.898E-03
94242.50c	**Pu-242**	5.404E-04	4.778E-05	5.719E-04	5.057E-05	9.592E-04	8.487E-05	1.014E-03	8.973E-05
95241.50c	**Am-241**	3.198E-03	2.828E-04	3.356E-03	2.968E-04	4.528E-03	4.006E-04	4.931E-03	4.363E-04
96242.50c	Cm-242	3.180E-07	2.812E-08	2.620E-07	2.317E-08	5.376E-07	4.756E-08	3.990E-07	3.531E-08
96244.60c	Cm-244	1.539E-07	1.361E-08	2.200E-07	1.945E-08	3.340E-07	2.956E-08	4.350E-07	3.849E-08
55137.60c	Cs-137	1.113E-01	9.844E-03	1.190E-01	1.052E-02	1.362E-01	1.205E-02	1.455E-01	1.288E-02
60143.50c	**Nd-143**	1.183E-01	1.046E-02	1.168E-01	1.033E-02	1.433E-01	1.268E-02	1.422E-01	1.258E-02
60145.50c	Nd-145	8.177E-02	7.230E-03	8.086E-02	7.150E-03	9.969E-02	8.820E-03	9.901E-02	8.761E-03
60148.50c	Nd-148	3.708E-02	3.279E-03	3.679E-02	3.253E-03	4.526E-02	4.004E-03	4.493E-02	3.976E-03
	Sub-Total	9.970E+02		9.969E+02		9.963E+02		9.962E+02	
8016.50c	Oxygen	134.0244924	1.185E+01	1.340E+02	1.185E+01	133.9301461	1.185E+01	1.339E+02	1.185E+01
	Total	1.131E+03	1.000E+02	1.131E+03	1.000E+02	1.130E+03	1.000E+02	1.130E+03	1.000E+02

Table V-9. JPDR Case No. 3 & 4 MCNP Input Development

JPDR BWR		Source File:	Input File:	Source: ORNL/TM-13315	Input File:	Source File:	Input File:	Source: ORNL/TM-13315	Input File:
		N03	J3-S	p. 114	J3-M	N04	J4-S	p. 114	J4-M
MCNP Designations	Isotopes	Calculated Concentration (g/MTUO2)	MCNP Input Values	Measured Value (g/MTUO2)	MCNP Input Values	Calculated Concentration (g/MTUO2)	MCNP Input Values	Measured Value (g/MTUO2)	MCNP Input Values
92234.50c	**U-234**	1.467E-01	1.296E-02	1.469E-01	1.298E-02	1.436E-01	1.271E-02	1.456E-01	1.289E-02
92235.50c	**U-235**	2.292E+01	2.025E+00	2.296E+01	2.029E+00	2.130E+01	1.885E+00	2.153E+01	1.906E+00
92236.50c	**U-236**	6.916E-01	6.112E-02	6.904E-01	6.102E-02	9.588E-01	8.485E-02	9.264E-01	8.199E-02
92238.50c	**U-238**	9.721E+02	8.590E+01	9.720E+02	8.591E+01	9.713E+02	8.596E+01	9.710E+02	8.594E+01
94238.50c	**Pu-238**	4.378E-04	3.869E-05	3.009E-04	2.659E-05	1.090E-03	9.643E-05	1.240E-03	1.098E-04
94239.55c	**Pu-239**	1.270E+00	1.122E-01	1.229E+00	1.086E-01	1.709E+00	1.513E-01	1.701E+00	1.506E-01
94240.50c	**Pu-240**	8.146E-02	7.198E-03	7.626E-02	6.740E-03	1.660E-01	1.469E-02	1.599E-01	1.415E-02
94241.50c	**Pu-241**	8.856E-03	7.826E-04	8.451E-03	7.469E-04	2.472E-02	2.187E-03	2.392E-02	2.117E-03
94242.50c	**Pu-242**	2.760E-04	2.439E-05	1.929E-04	1.705E-05	1.258E-03	1.113E-04	1.203E-03	1.065E-04
95241.50c	**Am-241**	2.017E-03	1.782E-04	1.816E-03	1.605E-04	5.651E-03	5.001E-04	5.942E-03	5.259E-04
96242.50c	Cm-242	1.655E-07	1.463E-08	1.130E-07	9.987E-09	7.209E-07	6.379E-08	5.350E-07	4.735E-08
96244.60c	Cm-244	5.603E-08	4.951E-09	5.810E-08	5.135E-09	5.533E-07	4.896E-08	6.340E-07	5.611E-08
55137.60c	Cs-137	9.136E-02	8.073E-03	9.370E-02	8.281E-03	1.434E-01	1.269E-02	1.481E-01	1.311E-02
60143.50c	**Nd-143**	9.794E-02	8.654E-03	9.618E-02	8.500E-03	1.502E-01	1.329E-02	1.493E-01	1.321E-02
60145.50c	Nd-145	6.739E-02	5.955E-03	6.633E-02	5.862E-03	1.046E-01	9.258E-03	1.042E-01	9.223E-03
60148.50c	Nd-148	3.047E-02	2.692E-03	3.001E-02	2.652E-03	4.767E-02	4.219E-03	4.733E-02	4.189E-03
	Sub-Total	9.975E+02		9.974E+02		9.961E+02		9.959E+02	
8016.50c	Oxygen	134.0991299	1.185E+01	1.341E+02	1.185E+01	133.905173	1.185E+01	1.339E+02	1.185E+01
	Total	1.132E+03	1.000E+02	1.131E+03	1.000E+02	1.130E+03	1.000E+02	1.130E+03	1.000E+02

Table V-10. JPDR Case No. 5 & 6 MCNP Input Development

JPDR BWR		Source File:	Input File:	Source: ORNL/TM-13315	Input File:	Source File:	Input File:	Source: ORNL/TM-13315	Input File:
		N05	J5-S	p. 115	J5-M	N06	J6-S	p. 115	J6-M
MCNP Designations	Isotopes	Calculated Concentration (g/MTUO2)	MCNP Input Values	Measured Value (g/MTUO2)	MCNP Input Values	Calculated Concentration (g/MTUO2)	MCNP Input Values	Measured Value (g/MTUO2)	MCNP Input Values
92234.50c	**U-234**	1.377E-01	1.222E-02	1.353E-01	1.201E-02	1.399E-01	1.241E-02	1.433E-01	1.201E-02
92235.50c	**U-235**	1.867E+01	1.657E+00	1.888E+01	1.675E+00	1.940E+01	1.720E+00	1.892E+01	1.675E+00
92236.50c	**U-236**	1.401E+00	1.243E-01	1.390E+00	1.233E-01	1.266E+00	1.123E-01	1.211E+00	1.233E-01
92238.50c	**U-238**	9.696E+02	8.603E+01	9.694E+02	8.602E+01	9.703E+02	8.603E+01	9.709E+02	8.602E+01
94238.50c	**Pu-238**	3.710E-03	3.292E-04	3.564E-03	3.163E-04	2.413E-03	2.139E-04	2.401E-03	3.163E-04
94239.55c	**Pu-239**	2.428E+00	2.154E-01	2.360E+00	2.094E-01	2.124E+00	1.883E-01	2.016E+00	2.094E-01
94240.50c	**Pu-240**	3.681E-01	3.266E-02	3.518E-01	3.122E-02	2.909E-01	2.579E-02	2.722E-01	3.122E-02
94241.50c	**Pu-241**	7.678E-02	6.813E-03	7.508E-02	6.662E-03	5.238E-02	4.644E-03	4.812E-02	6.662E-03
94242.50c	**Pu-242**	7.162E-03	6.355E-04	6.739E-03	5.980E-04	4.237E-03	3.757E-04	3.888E-03	5.980E-04
93237.50c	**Np-237**	2.166E-02	1.922E-03	3.943E-02	3.499E-03	1.473E-02	1.306E-03	3.135E-02	3.499E-03
95241.50c	**Am-241**	2.166E-02	1.922E-03	1.825E-02	1.619E-03	1.473E-02	1.306E-03	1.311E-02	1.619E-03
95242.50c	**Am-242m**	8.083E-05	7.172E-06	7.470E-05	6.629E-06	4.977E-05	4.412E-06	4.700E-05	6.629E-06
96242.50c	Cm-242	1.210E-06	1.074E-07	8.960E-07	7.951E-08	7.063E-07	6.262E-08	5.640E-07	7.951E-08
96244.60c	Cm-244	9.005E-06	7.990E-07	7.850E-06	6.966E-07	3.487E-06	3.091E-07	2.990E-06	6.966E-07
55134.60c	Cs-134	1.124E-03	9.975E-05	1.018E-03	9.034E-05	8.245E-04	7.310E-05	6.956E-04	9.034E-05
55137.60c	Cs-137	2.319E-01	2.058E-02	2.239E-01	1.987E-02	2.035E-01	1.804E-02	1.941E-01	1.987E-02
60143.50c	**Nd-143**	2.369E-01	2.102E-02	2.366E-01	2.100E-02	2.111E-01	1.871E-02	2.114E-01	2.100E-02
60145.50c	Nd-145	1.689E-01	1.499E-02	1.686E-01	1.496E-02	1.495E-01	1.325E-02	1.498E-01	1.496E-02
60148.50c	Nd-148	7.843E-02	6.959E-03	7.854E-02	6.970E-03	6.881E-02	6.100E-03	6.885E-02	6.970E-03
63154.50c	Eu-154	6.920E-04	6.140E-05	6.523E-04	5.788E-05	5.020E-04	4.451E-05	4.696E-04	5.788E-05
63155.50c	Eu-155	3.664E-04	3.251E-05	6.358E-04	5.642E-05	3.230E-04	2.864E-05	5.326E-04	5.642E-05
	Sub-Total	9.935E+02		9.934E+02		9.943E+02		9.942E+02	
8016.50c	Oxygen	133.5512714	1.185E+01	1.335E+02	1.185E+01	133.6593461	1.185E+01	1.336E+02	1.185E+01
	Total	1.127E+03	1.000E+02	1.127E+03	1.000E+02	1.128E+03	1.000E+02	1.128E+03	1.000E+02

Table V-11. JPDR Case No. 7 & 8 MCNP Input Development

JPDR BWR		Source File:	Input File:	Source: ORNL/TM-13315	Input File:	Source File:	Input File:	Source: ORNL/TM-13315	Input File:
		N07	J7-S	p. 116	J7-M	N08	J8-S	p. 116	J8-M
MCNP Designations	Isotopes	Calculated Concentration (g/MTUO2)	MCNP Input Values	Measured Value (g/MTUO2)	MCNP Input Values	Calculated Concentration (g/MTUO2)	MCNP Input Values	Measured Value (g/MTUO2)	MCNP Input Values
92234.50c	**U-234**	1.378E-01	1.223E-02	1.343E-01	1.201E-02	1.392E-01	1.234E-02	1.364E-01	1.201E-02
92235.50c	**U-235**	1.872E+01	1.661E+00	1.875E+01	1.675E+00	1.906E+01	1.691E+00	1.909E+01	1.675E+00
92236.50c	**U-236**	1.392E+00	1.235E-01	1.375E+00	1.233E-01	1.323E+00	1.174E-01	1.314E+00	1.233E-01
92238.50c	**U-238**	9.697E+02	8.603E+01	9.695E+02	8.602E+01	9.701E+02	8.604E+01	9.701E+02	8.602E+01
94238.50c	**Pu-238**	3.635E-03	3.226E-04	3.875E-03	3.163E-04	2.801E-03	2.485E-04	2.969E-03	3.163E-04
94239.55c	**Pu-239**	2.415E+00	2.143E-01	2.432E+00	2.094E-01	2.211E+00	1.961E-01	2.173E+00	2.094E-01
94240.50c	**Pu-240**	3.636E-01	3.226E-02	3.592E-01	3.122E-02	3.190E-01	2.829E-02	3.086E-01	3.122E-02
94241.50c	**Pu-241**	7.543E-02	6.692E-03	8.111E-02	6.662E-03	6.003E-02	5.324E-03	5.974E-02	6.662E-03
94242.50c	**Pu-242**	6.971E-03	6.185E-04	7.181E-03	5.980E-04	5.190E-03	4.603E-04	5.187E-03	5.980E-04
93237.50c	**Np-237**	2.128E-02	1.888E-03	4.141E-02	3.499E-03	1.689E-02	1.498E-03	3.527E-02	3.499E-03
95241.50c	**Am-241**	2.128E-02	1.888E-03	2.114E-02	1.619E-03	1.689E-02	1.498E-03	1.609E-02	1.619E-03
95242.50c	**Am-242m**	7.908E-05	7.017E-06	1.003E-04	6.629E-06	5.891E-05	5.224E-06	6.960E-05	6.629E-06
96242.50c	Cm-242	1.179E-06	1.046E-07	1.090E-06	7.951E-08	8.600E-07	7.627E-08	7.570E-07	7.951E-08
96244.60c	Cm-244	8.610E-06	7.639E-07	9.950E-06	6.966E-07	4.876E-06	4.324E-07	5.240E-06	6.966E-07
55134.60c	Cs-134	1.106E-03	9.815E-05	1.081E-03	9.034E-05	9.281E-04	8.231E-05	8.299E-04	9.034E-05
55137.60c	Cs-137	2.300E-01	2.041E-02	2.242E-01	1.987E-02	2.156E-01	1.912E-02	2.072E-01	1.987E-02
60143.50c	**Nd-143**	2.352E-01	2.087E-02	2.346E-01	2.100E-02	2.223E-01	1.971E-02	2.237E-01	2.100E-02
60145.50c	Nd-145	1.676E-01	1.487E-02	1.672E-01	1.496E-02	1.580E-01	1.401E-02	1.586E-01	1.496E-02
60148.50c	Nd-148	7.780E-02	6.903E-03	7.789E-02	6.970E-03	7.289E-02	6.464E-03	7.298E-02	6.970E-03
63154.50c	Eu-154	6.806E-04	6.039E-05	6.901E-04	5.788E-05	5.660E-04	5.020E-05	5.402E-04	5.788E-05
63155.50c	Eu-155	3.636E-04	3.226E-05	6.536E-04	5.642E-05	3.403E-04	3.018E-05	6.037E-04	5.642E-05
	Sub-Total	9.935E+02		9.934E+02		9.939E+02		9.939E+02	
8016.50c	Oxygen	133.5590456	1.185E+01	1.335E+02	1.185E+01	133.61354	1.185E+01	1.336E+02	1.185E+01
	Total	1.127E+03	1.000E+02	1.127E+03	1.000E+02	1.128E+03	1.000E+02	1.128E+03	1.000E+02

Table V-12. JPDR Case No. 9 & 10 MCNP Input Development

JPDR BWR		Source File:	Input File:	Source: ORNL/TM-13315	Input File:	Source File:	Input File:	Source: ORNL/TM-13315	Input File:
		N09	J9-S	p. 117	J9-M	N10	J10-S	p. 117	J10-M
MCNP Designations	Isotopes	Calculated Concentration (g/MTUO2)	MCNP Input Values	Measured Value (g/MTUO2)	MCNP Input Values	Calculated Concentration (g/MTUO2)	MCNP Input Values	Measured Value (g/MTUO2)	MCNP Input Values
92234.50c	**U-234**	1.467E-01	1.296E-02	1.459E-01	1.201E-02	1.413E-01	1.251E-02	1.366E-01	1.201E-02
92235.50c	**U-235**	2.300E+01	2.033E+00	2.318E+01	1.675E+00	2.054E+01	1.819E+00	2.069E+01	1.675E+00
92236.50c	**U-236**	6.811E-01	6.019E-02	6.905E-01	1.233E-01	1.102E+00	9.755E-02	1.097E+00	1.233E-01
92238.50c	**U-238**	9.721E+02	8.590E+01	9.718E+02	8.602E+01	9.706E+02	8.596E+01	9.702E+02	8.602E+01
94238.50c	**Pu-238**	4.361E-04	3.853E-05	5.236E-04	3.163E-04	1.906E-03	1.688E-04	2.550E-03	3.163E-04
94239.55c	**Pu-239**	1.277E+00	1.128E-01	1.261E+00	2.094E-01	2.076E+00	1.838E-01	2.240E+00	2.094E-01
94240.50c	**Pu-240**	7.989E-02	7.059E-03	7.798E-02	3.122E-02	2.327E-01	2.061E-02	2.404E-01	3.122E-02
94241.50c	**Pu-241**	8.415E-03	7.436E-04	8.853E-03	6.662E-03	4.120E-02	3.648E-03	4.974E-02	6.662E-03
94242.50c	**Pu-242**	2.656E-04	2.347E-05	2.730E-04	5.980E-04	2.637E-03	2.336E-04	3.081E-03	5.980E-04
93237.50c	**Np-237**	2.354E-03	2.080E-04	1.430E-02	3.499E-03	1.161E-02	1.028E-03	3.482E-02	3.499E-03
95241.50c	**Am-241**	2.354E-03	2.080E-04	2.242E-03	1.619E-03	1.161E-02	1.028E-03	1.269E-02	1.619E-03
95242.50c	**Am-242m**	4.901E-06	4.330E-07	5.300E-06	6.629E-06	3.768E-05	3.337E-06	2.000E-05	6.629E-06
96242.50c	Cm-242	5.178E-08	4.575E-09	4.780E-08	7.951E-08	4.803E-07	4.254E-08	5.090E-07	7.951E-08
96244.60c	Cm-244	5.323E-08	4.704E-09	7.710E-08	6.966E-07	1.954E-06	1.730E-07	3.420E-06	6.966E-07
55134.60c	Cs-134	1.753E-04	1.549E-05	1.624E-04	9.034E-05	6.274E-04	5.556E-05	6.386E-04	9.034E-05
55137.60c	Cs-137	8.734E-02	7.717E-03	8.287E-02	1.987E-02	1.680E-01	1.488E-02	1.601E-01	1.987E-02
60143.50c	**Nd-143**	9.553E-02	8.441E-03	9.515E-02	2.100E-02	1.767E-01	1.565E-02	1.762E-01	2.100E-02
60145.50c	Nd-145	6.571E-02	5.807E-03	6.547E-02	1.496E-02	1.239E-01	1.097E-02	1.233E-01	1.496E-02
60148.50c	Nd-148	2.974E-02	2.628E-03	2.960E-02	6.970E-03	5.700E-02	5.048E-03	5.696E-02	6.970E-03
63154.50c	Eu-154	1.061E-04	9.377E-06	1.045E-04	5.788E-05	3.846E-04	3.406E-05	4.353E-04	5.788E-05
	Sub-Total	9.976E+02		9.975E+02		9.953E+02		9.952E+02	
8016.50c	Oxygen	134.1086683	1.185E+01	1.341E+02	1.185E+01	133.8001108	1.185E+01	1.338E+02	1.185E+01
	Total	1.132E+03	1.000E+02	1.132E+03	1.000E+02	1.129E+03	1.000E+02	1.129E+03	1.000E+02

Table V-13. JPDR Case No. 11 & 12 MCNP Input Development

JPDR BWR		Source File:	Input File:	Source: ORNL/TM-13315	Input File:	Source File:	Input File:	Source: ORNL/TM-13315	Input File:
		N11	J11-S	p. 118	J11-M	N12	J12-S	p. 118	J12-M
MCNP Designations	Isotopes	Calculated Concentration (g/MTUO2)	MCNP Input Values	Measured Value (g/MTUO2)	MCNP Input Values	Calculated Concentration (g/MTUO2)	MCNP Input Values	Measured Value (g/MTUO2)	MCNP Input Values
92234.50c	**U-234**	1.394E-01	1.236E-02	1.335E-01	1.201E-02	1.400E-01	1.241E-02	1.442E-01	1.201E-02
92235.50c	**U-235**	1.956E+01	1.734E+00	1.988E+01	1.675E+00	1.952E+01	1.731E+00	1.961E+01	1.675E+00
92236.50c	**U-236**	1.259E+00	1.116E-01	1.266E+00	1.233E-01	1.251E+00	1.109E-01	1.260E+00	1.233E-01
92238.50c	**U-238**	9.701E+02	8.600E+01	9.695E+02	8.602E+01	9.703E+02	8.602E+01	9.699E+02	8.602E+01
94238.50c	**Pu-238**	2.740E-03	2.429E-04	3.710E-03	3.163E-04	2.396E-03	2.124E-04	3.290E-03	3.163E-04
94239.55c	**Pu-239**	2.269E+00	2.011E-01	2.472E+00	2.094E-01	2.135E+00	1.892E-01	2.353E+00	2.094E-01
94240.50c	**Pu-240**	3.007E-01	2.666E-02	3.143E-01	3.122E-02	2.866E-01	2.541E-02	3.038E-01	3.122E-02
94241.50c	**Pu-241**	5.841E-02	5.178E-03	7.112E-02	6.662E-03	5.197E-02	4.607E-03	6.493E-02	6.662E-03
94242.50c	**Pu-242**	4.602E-03	4.079E-04	5.311E-03	5.980E-04	4.111E-03	3.644E-04	4.976E-03	5.980E-04
93237.50c	**Np-237**	1.647E-02	1.460E-03	4.105E-02	3.499E-03	1.462E-02	1.296E-03	3.798E-02	3.499E-03
95241.50c	**Am-241**	1.647E-02	1.460E-03	1.829E-02	1.619E-03	1.462E-02	1.296E-03	1.642E-02	1.619E-03
95242.50c	**Am-242m**	5.802E-05	5.143E-06	6.400E-05	6.629E-06	4.948E-05	4.386E-06	7.830E-05	6.629E-06
96242.50c	Cm-242	8.038E-07	7.126E-08	8.800E-07	7.951E-08	6.936E-07	6.149E-08	7.610E-07	7.951E-08
96244.60c	Cm-244	4.546E-06	4.030E-07	7.260E-06	6.966E-07	3.419E-06	3.031E-07	5.390E-06	6.966E-07
55134.60c	Cs-134	8.660E-04	7.677E-05	8.872E-04	9.034E-05	8.099E-04	7.180E-05	7.835E-04	9.034E-05
55137.60c	Cs-137	2.011E-01	1.782E-02	1.924E-01	1.987E-02	2.000E-01	1.773E-02	1.881E-01	1.987E-02
60143.50c	**Nd-143**	2.083E-01	1.847E-02	2.069E-01	2.100E-02	2.077E-01	1.841E-02	2.071E-01	2.100E-02
60145.50c	Nd-145	1.473E-01	1.306E-02	1.466E-01	1.496E-02	1.470E-01	1.303E-02	1.466E-01	1.496E-02
60148.50c	Nd-148	6.809E-02	6.036E-03	6.814E-02	6.970E-03	6.766E-02	5.998E-03	6.771E-02	6.970E-03
63154.50c	Eu-154	5.321E-04	4.717E-05	6.120E-04	5.788E-05	4.938E-04	4.378E-05	5.337E-04	5.788E-05
	Sub-Total	9.944E+02		9.943E+02		9.944E+02		9.943E+02	
8016.50c	Oxygen	133.6704802	1.185E+01	1.337E+02	1.185E+01	133.672475	1.185E+01	1.337E+02	1.185E+01
	Total	1.128E+03	1.000E+02	1.128E+03	1.000E+02	1.128E+03	1.000E+02	1.128E+03	1.000E+02

Table V-14. JPDR Case No. 13 & 14 MCNP Input Development

JPDR BWR		Source File:	Input File:	Source: ORNL/TM-13315	Input File:	Source File:	Input File:	Source: ORNL/TM-13315	Input File:
		N13	J13-S	p. 119	J13-M	N14	J14-S	p. 119	J14-M
MCNP Designations	Isotopes	Calculated Concentration (g/MTUO2)	MCNP Input Values	Measured Value (g/MTUO2)	MCNP Input Values	Calculated Concentration (g/MTUO2)	MCNP Input Values	Measured Value (g/MTUO2)	MCNP Input Values
92234.50c	**U-234**	1.422E-01	1.259E-02	1.454E-01	1.201E-02	1.484E-01	1.310E-02	1.510E-01	1.201E-02
92235.50c	**U-235**	2.046E+01	1.812E+00	2.055E+01	1.675E+00	2.348E+01	2.073E+00	2.354E+01	1.675E+00
92236.50c	**U-236**	1.091E+00	9.665E-02	1.094E+00	1.233E-01	5.836E-01	5.154E-02	5.843E-01	1.233E-01
92238.50c	**U-238**	9.710E+02	8.599E+01	9.707E+02	8.602E+01	9.727E+02	8.590E+01	9.724E+02	8.602E+01
94238.50c	**Pu-238**	1.505E-03	1.333E-04	1.894E-03	3.163E-04	2.019E-04	1.783E-05	2.511E-04	3.163E-04
94239.55c	**Pu-239**	1.864E+00	1.651E-01	1.951E+00	2.094E-01	9.316E-01	8.228E-02	9.554E-01	2.094E-01
94240.50c	**Pu-240**	2.137E-01	1.893E-02	2.176E-01	3.122E-02	4.866E-02	4.297E-03	4.913E-02	3.122E-02
94241.50c	**Pu-241**	3.337E-02	2.955E-03	3.864E-02	6.662E-03	3.539E-03	3.126E-04	3.955E-03	6.662E-03
94242.50c	**Pu-242**	2.160E-03	1.913E-04	2.441E-03	5.980E-04	9.142E-05	8.074E-06	1.021E-04	5.980E-04
93237.50c	**Np-237**	9.366E-03	8.295E-04	2.746E-02	3.499E-03	9.856E-04	8.705E-05	9.613E-03	3.499E-03
95241.50c	**Am-241**	9.366E-03	8.295E-04	1.013E-02	1.619E-03	9.856E-04	8.705E-05	1.023E-03	1.619E-03
95242.50c	**Am-242m**	2.840E-05	2.515E-06	2.470E-05	6.629E-06	1.621E-06	1.431E-07	2.590E-06	6.629E-06
96242.50c	Cm-242	3.693E-07	3.271E-08	3.880E-07	7.951E-08	1.668E-08	1.473E-09	1.600E-08	7.951E-08
96244.60c	Cm-244	1.182E-06	1.047E-07	1.640E-06	6.966E-07	8.105E-09	7.159E-10	1.920E-08	6.966E-07
55134.60c	Cs-134	5.601E-04	4.961E-05	5.141E-04	9.034E-05	1.007E-04	8.897E-06	9.330E-05	9.034E-05
55137.60c	Cs-137	1.674E-01	1.483E-02	1.572E-01	1.987E-02	7.142E-02	6.308E-03	6.825E-02	1.987E-02
60143.50c	**Nd-143**	1.767E-01	1.565E-02	1.760E-01	2.100E-02	7.911E-02	6.987E-03	7.882E-02	2.100E-02
60145.50c	Nd-145	1.240E-01	1.098E-02	1.237E-01	1.496E-02	5.414E-02	4.782E-03	5.406E-02	1.496E-02
60148.50c	Nd-148	5.668E-02	5.020E-03	5.672E-02	6.970E-03	2.426E-02	2.142E-03	2.419E-02	6.970E-03
63154.50c	Eu-154	3.399E-04	3.011E-05	3.527E-04	5.788E-05	6.128E-05	5.412E-06	6.250E-05	5.788E-05
	Sub-Total	9.953E+02		9.953E+02		9.981E+02		9.979E+02	
8016.50c	Oxygen	133.802614	1.185E+01	1.338E+02	1.185E+01	134.17226	1.185E+01	1.342E+02	1.185E+01
	Total	1.129E+03	1.000E+02	1.129E+03	1.000E+02	1.132E+03	1.000E+02	1.132E+03	1.000E+02

Table V-15. JPDR Case No. 15 & 16 MCNP Input Development

JPDR BWR		Source File:	Input File:	Source: ORNL/TM-13315	Input File:	Source File:	Input File:	Source: ORNL/TM-13315	Input File:
		N15	J15-S	p. 120	J15-M	N16	J16-S	p. 120	J16-M
MCNP Designations	Isotopes	Calculated Concentration (g/MTUO2)	MCNP Input Values	Measured Value (g/MTUO2)	MCNP Input Values	Calculated Concentration (g/MTUO2)	MCNP Input Values	Measured Value (g/MTUO2)	MCNP Input Values
92234.50c	**U-234**	1.402E-01	1.242E-02	1.404E-01	1.201E-02	1.415E-01	1.254E-02	1.415E-01	1.201E-02
92235.50c	**U-235**	2.005E+01	1.777E+00	2.019E+01	1.675E+00	2.015E+01	1.785E+00	2.015E+01	1.675E+00
92236.50c	**U-236**	1.185E+00	1.050E-01	1.177E+00	1.233E-01	1.143E+00	1.013E-01	1.162E+00	1.233E-01
92238.50c	**U-238**	9.703E+02	8.598E+01	9.700E+02	8.602E+01	9.708E+02	8.600E+01	9.706E+02	8.602E+01
94238.50c	**Pu-238**	2.415E-03	2.140E-04	2.779E-03	3.163E-04	1.750E-03	1.550E-04	2.103E-03	3.163E-04
94239.55c	**Pu-239**	2.224E+00	1.971E-01	2.257E+00	2.094E-01	1.947E+00	1.725E-01	1.964E+00	2.094E-01
94240.50c	**Pu-240**	2.711E-01	2.402E-02	2.644E-01	3.122E-02	2.360E-01	2.091E-02	2.353E-01	3.122E-02
94241.50c	**Pu-241**	5.163E-02	4.575E-03	5.623E-02	6.662E-03	3.865E-02	3.424E-03	4.248E-02	6.662E-03
94242.50c	**Pu-242**	3.681E-03	3.262E-04	3.793E-03	5.980E-04	2.681E-03	2.375E-04	2.866E-03	5.980E-04
93237.50c	**Np-237**	1.457E-02	1.291E-03	3.579E-02	3.499E-03	1.086E-02	9.618E-04	3.021E-02	3.499E-03
95241.50c	**Am-241**	1.457E-02	1.291E-03	1.424E-02	1.619E-03	1.086E-02	9.618E-04	1.124E-02	1.619E-03
95242.50c	**Am-242m**	5.014E-05	4.443E-06	3.680E-05	6.629E-06	3.414E-05	3.024E-06	3.310E-05	6.629E-06
96242.50c	Cm-242	6.639E-07	5.883E-08	5.950E-07	7.951E-08	4.554E-07	4.034E-08	4.380E-07	7.951E-08
96244.60c	Cm-244	3.362E-06	2.979E-07	4.060E-06	6.966E-07	1.675E-06	1.483E-07	2.260E-06	6.966E-07
55134.60c	Cs-134	7.611E-04	6.744E-05	7.320E-04	9.034E-05	6.333E-04	5.611E-05	5.844E-04	9.034E-05
55137.60c	Cs-137	1.851E-01	1.640E-02	1.781E-01	1.987E-02	1.780E-01	1.577E-02	1.712E-01	1.987E-02
60143.50c	**Nd-143**	1.931E-01	1.711E-02	1.926E-01	2.100E-02	1.869E-01	1.656E-02	1.871E-01	2.100E-02
60145.50c	Nd-145	1.359E-01	1.204E-02	1.355E-01	1.496E-02	1.315E-01	1.165E-02	1.312E-01	1.496E-02
60148.50c	Nd-148	6.276E-02	5.561E-03	6.273E-02	6.970E-03	6.024E-02	5.336E-03	6.029E-02	6.970E-03
63154.50c	Eu-154	4.686E-04	4.152E-05	4.964E-04	5.788E-05	3.848E-04	3.409E-05	3.943E-04	5.788E-05
63155.50c	Eu-155	3.016E-04	2.673E-05	5.319E-04	5.642E-05	2.884E-04	2.555E-05	5.033E-04	5.642E-05
	Sub-Total	9.948E+02		9.947E+02		9.950E+02		9.949E+02	
8016.50c	Oxygen	133.731607	1.185E+01	1.337E+02	1.185E+01	133.75768	1.185E+01	1.337E+02	1.185E+01
	Total	1.129E+03	1.000E+02	1.128E+03	1.000E+02	1.129E+03	1.000E+02	1.129E+03	1.000E+02

ATTACHMENT VI
MCNP Results

Tables VI-1 through 6 present the multiplication factors of a 44 BWR Waste Package in a postulated flooded condition. The SNF in the waste package represents the corresponding reactor fuel. The only input parameter varied in the individual tables is isotopic concentrations from the SAS2H runs and RCA values measured from extracted pellets.

Each line in the table provides the file name and burnup given in number of Gigawatt days per metric ton of uranium. The RCA column provides the multiplication factors, standard deviation from the MCNP code and the average energy of a neutron causing fission (AENCF) resulting from the measured isotopic concentrations.
The SAS2H column provides the same information resulting from SAS2H isotopic predictions.

The last set of columns provides the Δk_{eff} (k_{SAS2H}-k_{RCA}) values and the associated standard deviations.

Table VI-1. Limerick BWR MCNP Results

Sample #	Sample ID	Burn-up	Measured Isotopes (RCA)			Calculated SAS2H Isotopes			Delta k_{eff}	
		(GWd/MTU)	k_{RCA}	σ	AENCF (MeV)	k_{SAS2H}	σ	AENCF (MeV)	Δk_{eff}	RS(σ)
1	D8–3D2B	54.840	0.55913	0.00052	0.304	0.51709	0.00045	0.330	-0.04204	0.00069
2	D8–4G3	37.020	0.63515	0.00052	0.259	0.57645	0.00049	0.279	-0.05870	0.00071
3	D9–1D2	62.110	0.46612	0.00044	0.369	0.48665	0.00041	0.351	0.02053	0.00060
4	D9–2D2	65.540	0.50712	0.00047	0.339	0.51048	0.00043	0.335	0.00336	0.00064
5	D9–4D4	64.950	0.53262	0.00049	0.324	0.46549	0.00041	0.361	-0.06713	0.00064
6	D9–4G1E1	56.520	0.56781	0.00048	0.299	0.50364	0.00048	0.331	-0.06417	0.00068
7	H5–3A1C	57.915	0.58889	0.00047	0.290	0.55520	0.00042	0.305	-0.03369	0.00063
8	H5–3A1G	57.810	0.59134	0.00051	0.291	0.55936	0.00050	0.304	-0.03198	0.00071

Source: Limerick results from (BSC 2003a, p. 33)

Table VI-2. Copper BWR MCNP Results

	Burn-up	Measured Isotopes (RCA)			Calculated SAS2H Isotopes				Delta k_{eff}	
File	GWd/MTU	k_{RCA}	σ	AENCF (MeV)	File	k_{SAS2H}	σ	AENCF (MeV)	Δk_{eff}	RS(σ)
C1-Mo	18.96	0.74269	0.00057	0.228	C1-So	0.74421	0.00056	0.229	0.00152	7.9906E-04
C2-Mo	33.07	0.62824	0.00052	0.279	C2-So	0.64049	0.00050	0.276	0.01225	7.2139E-04
C3-Mo	33.94	0.60775	0.00060	0.290	C3-So	0.61936	0.00058	0.285	0.01161	8.3451E-04
C4-Mo	17.84	0.76112	0.00063	0.222	C4-So	0.75242	0.00060	0.225	-0.00870	8.7000E-04
C5-Mo	29.23	0.69403	0.00052	0.251	C5-So	0.68134	0.00053	0.257	-0.01269	7.4250E-04
C6-Mo	31.04	0.64546	0.00058	0.270	C6-So	0.63225	0.00057	0.276	-0.01321	8.1320E-04

Table VI-3. Gundremmingen BWR MCNP Results

	Burn-up	Measured Isotopes			Calculated SAS2H Isotopes				Delta k_{eff}	
File	GWd/MTU	k_{RCA}	σ	AENCF (MeV)	File	k_{SAS2H}	σ	AENCF (MeV)	Δk_{eff}	RS(σ)
G1-Mo	25.730	0.54239	0.00055	0.294	**G1-So**	0.53847	0.00050	0.297	-0.00392	0.00074
G2-Mo	27.400	0.57673	0.00055	0.279	**G2-So**	0.56828	0.00054	0.287	-0.00845	0.00077
G3-Mo	21.240	0.61904	0.00052	0.259	**G3-So**	0.59494	0.00061	0.268	-0.02410	0.00080
G4-Mo	23.510	0.59490	0.00060	0.270	**G4-So**	0.58321	0.00058	0.274	-0.01169	0.00083
G5-Mo	20.300	0.56687	0.00054	0.272	**G5-So**	0.56691	0.00057	0.272	0.00004	0.00079
G6-Mo	19.850	0.60008	0.00056	0.260	**G6-So**	0.59287	0.00062	0.262	-0.00721	0.00084
G7-Mo	14.390	0.63762	0.00065	0.241	**G7-So**	0.61921	0.00059	0.246	-0.01841	0.00088
G8-Mo	17.490	0.59852	0.00060	0.258	**G8-So**	0.60405	0.00052	0.254	0.00553	0.00079

Table VI-4. JPDR BWR MCNP Results

	Burn-up	Measured Isotopes (RCA)			Calculated SAS2H Isotopes				Delta k_{eff}	
File	GWd/MTU	k_{RCA}	σ	AENCF (MeV)	File	k_{SAS2H}	σ	AENCF (MeV)	Δk_{eff}	RS(σ)
J1-Mo	3.3032	0.74199	0.00068	0.187	J1-So	0.73809	0.00059	0.187	-0.00390	9.0028E-04
J2-Mo	4.0351	0.73409	0.00066	0.189	J2-So	0.73271	0.00067	0.189	-0.00138	9.4048E-04
J3-Mo	2.7120	0.74063	0.00066	0.185	J3-So	0.74143	0.00069	0.186	0.00080	9.5483E-04
J4-Mo	4.2510	0.73466	0.00058	0.189	J4-So	0.73224	0.00059	0.189	-0.00242	8.2735E-04
J5-Mo	7.0098	0.71604	0.00060	0.196	J5-So	0.71462	0.00062	0.197	-0.00142	8.6279E-04
J6-Mo	6.1465	0.71045	0.00064	0.198	J6-So	0.71648	0.00062	0.195	0.00603	8.9107E-04
J7-Mo	6.9535	0.71615	0.00055	0.197	J7-So	0.71490	0.00060	0.198	-0.00125	8.1394E-04
J8-Mo	6.5125	0.71373	0.00060	0.196	J8-So	0.71523	0.00059	0.197	0.00150	8.4149E-04
J9-Mo	2.6463	0.74431	0.00073	0.186	J9-So	0.74311	0.00070	0.186	-0.00120	1.0114E-03
J10-Mo	5.0861	0.73430	0.00061	0.191	J10-So	0.72975	0.00057	0.191	-0.00455	8.3487E-04
J11-Mo	6.0808	0.72770	0.00067	0.193	J11-So	0.72207	0.00063	0.194	-0.00563	9.1967E-04
J12-Mo	6.0433	0.72280	0.00062	0.194	J12-So	0.72047	0.00062	0.195	-0.00233	8.7681E-04
J13-Mo	5.0580	0.72720	0.00059	0.191	J13-So	0.72646	0.00060	0.192	-0.00074	8.4149E-04
J14-Mo	2.1583	0.74480	0.00062	0.184	J14-So	0.74277	0.00060	0.186	-0.00203	8.6279E-04
J15-Mo	5.6022	0.72810	0.00060	0.193	J15-So	0.72593	0.00065	0.193	-0.00217	8.8459E-04
J16-Mo	5.3770	0.72280	0.00067	0.193	J16-So	0.72248	0.00065	0.193	-0.00032	9.3349E-04

INTENTIONALLY LEFT BLANK

ATTACHMENT VII
Bias and Uncertainty Determination

From Equation 7 several parameters have to be evaluated and summed from the data. Using the burn-up as the x-axis and Δk_{eff} as the y-axis, the general BWR case linear bias and uncertainty equation can be determined from Table VII-1.

Table VII-1. Parameters Evaluated for General BWR Case Bias Linear Fit.

X	Y		Evaluated Parameters					
Burn-up	Δk_{eff}	RS(σ)	x^2/σ^2	x/σ^2	$1/\sigma^2$	$x\Delta k_{eff}/\sigma^2$	$\Delta k_{eff}/\sigma^2$	$\Delta k_{eff}{}^2/\sigma^2$
54.84	-0.04204	6.8768E-04	6.3595E+09	1.1597E+08	2.1146E+06	-4.8752E+06	-8.8898E+04	3.7373E+03
37.02	-0.05870	7.1449E-04	2.6846E+09	7.2517E+07	1.9589E+06	-4.2568E+06	-1.1499E+05	6.7496E+03
62.11	0.02053	6.0141E-04	1.0665E+10	1.7172E+08	2.7647E+06	3.5253E+06	5.6760E+04	1.1653E+03
65.54	0.00336	6.3702E-04	1.0585E+10	1.6151E+08	2.4643E+06	5.4267E+05	8.2799E+03	2.7821E+01
64.95	-0.06713	6.3891E-04	1.0334E+10	1.5911E+08	2.4498E+06	-1.0681E+07	-1.6445E+05	1.1040E+04
56.52	-0.06417	6.7882E-04	6.9325E+09	1.2266E+08	2.1701E+06	-7.8709E+06	-1.3926E+05	8.9362E+03
57.915	-0.03369	6.3032E-04	8.4424E+09	1.4577E+08	2.5170E+06	-4.9110E+06	-8.4797E+04	2.8568E+03
57.81	-0.03198	7.1421E-04	6.5516E+09	1.1333E+08	1.9604E+06	-3.6243E+06	-6.2694E+04	2.0049E+03
18.96	0.00152	7.9906E-04	5.6301E+08	2.9695E+07	1.5662E+06	4.5136E+04	2.3806E+03	3.6185E+00
33.07	0.01225	7.2139E-04	2.1015E+09	6.3547E+07	1.9216E+06	7.7845E+05	2.3540E+04	2.8836E+02
33.94	0.01161	8.3451E-04	1.6541E+09	4.8736E+07	1.4360E+06	5.6583E+05	1.6671E+04	1.9356E+02
17.84	-0.00870	8.7000E-04	4.2049E+08	2.3570E+07	1.3212E+06	-2.0506E+05	-1.1494E+04	1.0000E+02
29.23	-0.01269	7.4250E-04	1.5498E+09	5.3020E+07	1.8139E+06	-6.7283E+05	-2.3018E+04	2.9210E+02
31.04	-0.01321	8.1320E-04	1.4570E+09	4.6938E+07	1.5122E+06	-6.2005E+05	-1.9976E+04	2.6388E+02
25.73	-0.00392	7.4330E-04	1.1982E+09	4.6570E+07	1.8100E+06	-1.8255E+05	-7.0950E+03	2.7812E+01
27.4	-0.00845	7.7078E-04	1.2637E+09	4.6120E+07	1.6832E+06	-3.8972E+05	-1.4223E+04	1.2019E+02
21.24	-0.02410	8.0156E-04	7.0216E+08	3.3058E+07	1.5564E+06	-7.9671E+05	-3.7510E+04	9.0398E+02
23.51	-0.01169	8.3451E-04	7.9368E+08	3.3759E+07	1.4360E+06	-3.9465E+05	-1.6786E+04	1.9623E+02
20.3	0.00004	7.8518E-04	6.6843E+08	3.2928E+07	1.6221E+06	1.3171E+03	6.4882E+01	2.5953E-03
19.85	-0.00721	8.3546E-04	5.6450E+08	2.8438E+07	1.4327E+06	-2.0504E+05	-1.0330E+04	7.4476E+01
14.39	-0.01841	8.7784E-04	2.6872E+08	1.8674E+07	1.2977E+06	-3.4378E+05	-2.3890E+04	4.3982E+02
17.49	0.00553	7.9398E-04	4.8525E+08	2.7744E+07	1.5863E+06	1.5343E+05	8.7722E+03	4.8510E+01
3.3032	-0.00390	9.0028E-04	1.3462E+07	4.0755E+06	1.2338E+06	-1.5894E+04	-4.8118E+03	1.8766E+01
4.0351	-0.00138	9.4048E-04	1.8408E+07	4.5620E+06	1.1306E+06	-6.2956E+03	-1.5602E+03	2.1531E+00
2.712	0.00080	9.5483E-04	8.0673E+06	2.9747E+06	1.0969E+06	2.3797E+03	8.7748E+02	7.0199E-01
4.251	-0.00242	8.2735E-04	2.6400E+07	6.2104E+06	1.4609E+06	-1.5029E+04	-3.5354E+03	8.5557E+00

Table VII-1. Parameters Evaluated for General BWR Case Bias Linear Fit.

X	Y		Evaluated Parameters					
Burn-up	Δk_{eff}	RS(σ)	x^2/σ^2	x/σ^2	$1/\sigma^2$	$x\Delta k_{eff}/\sigma^2$	$\Delta k_{eff}/\sigma^2$	$\Delta k_{eff}{}^2/\sigma^2$
7.0098	-0.00142	8.6279E-04	6.6009E+07	9.4167E+06	1.3434E+06	-1.3372E+04	-1.9076E+03	2.7088E+00
6.1465	0.00603	8.9107E-04	4.7581E+07	7.7412E+06	1.2594E+06	4.6679E+04	7.5945E+03	4.5795E+01
6.9535	-0.00125	8.1394E-04	7.2983E+07	1.0496E+07	1.5094E+06	-1.3120E+04	-1.8868E+03	2.3585E+00
6.5125	0.00150	8.4149E-04	5.9896E+07	9.1971E+06	1.4122E+06	1.3796E+04	2.1183E+03	3.1775E+00
2.6463	-0.00120	1.0114E-03	6.8461E+06	2.5871E+06	9.7761E+05	-3.1045E+03	-1.1731E+03	1.4078E+00
5.0861	-0.00455	8.3487E-04	3.7114E+07	7.2971E+06	1.4347E+06	-3.3202E+04	-6.5280E+03	2.9702E+01
6.0808	-0.00563	9.1967E-04	4.3717E+07	7.1894E+06	1.1823E+06	-4.0476E+04	-6.6564E+03	3.7476E+01
6.0433	-0.00233	8.7681E-04	4.7505E+07	7.8607E+06	1.3007E+06	-1.8315E+04	-3.0307E+03	7.0615E+00
5.058	-0.00074	8.4149E-04	3.6130E+07	7.1431E+06	1.4122E+06	-5.2859E+03	-1.0451E+03	7.7334E-01
2.1583	-0.00203	8.6279E-04	6.2577E+06	2.8994E+06	1.3434E+06	-5.8857E+03	-2.7270E+03	5.5359E+00
5.6022	-0.00217	8.8459E-04	4.0108E+07	7.1594E+06	1.2780E+06	-1.5536E+04	-2.7732E+03	6.0178E+00
5.377	-0.00032	9.3349E-04	3.3179E+07	6.1705E+06	1.1476E+06	-1.9746E+03	-3.6723E+02	1.1751E-01
Total of individual parameters:			7.6810E+10	1.6984E+09	6.0918E+07	-3.4542E+07	-7.3035E+05	3.9643E+04

From Equation 16, the following can be evaluated:

$$\Delta = \Sigma_i \frac{1}{\sigma_i^2} * \Sigma_i \frac{X_i^2}{\sigma_i^2} - \left(\Sigma_i \frac{X_i}{\sigma_i^2} \right)^2 = 1.795\text{E}18$$

where $$a = \left(\frac{1}{\Delta}\right)\left(\Sigma_i \frac{X_i^2}{\sigma_i^2} * \Sigma_i \frac{\Delta k_{effi}}{\sigma_i^2} - \Sigma_i \frac{X_i}{\sigma_i^2} * \Sigma_i \frac{X_i \Delta k_{effi}}{\sigma_i^2} \right) = 1.430\text{E-}3$$

$$b = \left(\frac{1}{\Delta}\right)\left(\Sigma_i \frac{1}{\sigma_i^2} * \Sigma_i \frac{X_i \Delta k_{effi}}{\sigma_i^2} - \Sigma_i \frac{X_i}{\sigma_i^2} * \Sigma_i \frac{\Delta k_{effi}}{\sigma_i^2} \right) = \text{-}4.813\text{E-}4$$

Therefore, the linear bias and uncertainty equation for the general BWR case becomes:

$$\Delta k_{fit}(B) = -4.813E\text{-}04 * \text{Burn-up} + 1.430E\text{-}03$$

(Eq. 14, Section 5.2.9.1)

To test for a statistical significance the parameters in Equations 12 , 13, and 14 are evaluated in Table VII-2.

Table VII-2. Student T Test for Statistical Significance

X	Y		
Burn-up	**Δk_{eff}**	**S_{xx}**	**SS_R**
54.84	-0.04204	1021.05	2.92E-04
37.02	-0.05870	199.77	1.79E-03
62.11	0.02053	1538.52	2.40E-03
65.54	0.00336	1819.36	1.12E-03
64.95	-0.06713	1769.37	1.39E-03
56.52	-0.06417	1131.24	1.47E-03
57.915	-0.03369	1227.03	5.25E-05
57.81	-0.03198	1219.68	3.12E-05
18.96	0.00152	15.41	8.49E-05
33.07	0.01225	103.71	7.15E-04
33.94	0.01161	122.19	7.03E-04
17.84	-0.00870	25.46	2.38E-06
29.23	-0.01269	40.25	2.58E-09
31.04	-0.01321	66.49	9.03E-08
25.73	-0.00392	8.09	4.95E-05
27.4	-0.00845	20.38	1.09E-05
21.24	-0.02410	2.71	2.34E-04
23.51	-0.01169	0.39	3.25E-06
20.3	0.00004	6.69	7.02E-05
19.85	-0.00721	9.22	8.36E-07
14.39	-0.01841	72.18	1.67E-04
17.49	0.00553	29.12	1.57E-04
3.3032	-0.00390	383.49	1.40E-05
4.0351	-0.00138	355.36	7.53E-07
2.712	0.00080	406.99	4.56E-07

Table VII-2. Student T Test for Statistical Significance

X	Y		
Burn-up	**Δk_{eff}**	**S_{xx}**	**SS_R**
4.251	-0.00242	347.27	3.25E-06
7.0098	-0.00142	252.06	2.74E-07
6.1465	0.00603	280.21	5.71E-05
6.9535	-0.00125	253.85	4.45E-07
6.5125	0.00150	268.09	1.03E-05
2.6463	-0.00120	409.65	1.84E-06
5.0861	-0.00455	316.84	1.25E-05
6.0808	-0.00563	282.42	1.71E-05
6.0433	-0.00233	283.68	7.25E-07
5.058	-0.00074	317.84	6.99E-08
2.1583	-0.00203	429.64	5.86E-06
5.6022	-0.00217	298.73	8.17E-07
5.377	-0.00032	306.57	7.02E-07
Average: 22.8861	**Totals:**	**15640.98**	**1.09E-02**

Evaluating Equation 12 for the General BWR Case:

$$T = b\sqrt{\frac{(n-2)S_{xx}}{SS_R}} = -4.813E^{-4}\sqrt{\frac{36*15640.98}{1.09E^{-2}}} = -3.46$$

With the absolute value of T = 3.46. The Microsoft Excel© function representing 38 data points and a confidence of 95% is found with the Inverse Student T function TINV(0.05,36) = 2.03. Therefore, the evaluated absolute value of T is greater than the Student T (3.46 > 2.03) indicating that there is a statistically significant trend in the data.

For the simple BWR case, Equation 10 is evaluated in Table VII-3.

Table VII-3. Parameters Evaluated for Simple Case Bias and Uncertainty Linear Fit.

X	Y		Evaluated Parameters					
Burn-up	Δk_{eff}	RS(σ)	x^2/σ^2	x/σ^2	$1/\sigma^2$	$x\Delta k_{eff}/\sigma^2$	$\Delta k_{eff}/\sigma^2$	y^2/σ^2
18.96	0.00152	7.9906E-04	5.6301E+08	2.9695E+07	1.5662E+06	4.5136E+04	2.3806E+03	3.6185E+00
33.07	0.01225	7.2139E-04	2.1015E+09	6.3547E+07	1.9216E+06	7.7845E+05	2.3540E+04	2.8836E+02
33.94	0.01161	8.3451E-04	1.6541E+09	4.8736E+07	1.4360E+06	5.6583E+05	1.6671E+04	1.9356E+02
17.84	-0.0087	8.7000E-04	4.2049E+08	2.3570E+07	1.3212E+06	-2.0506E+05	-1.1494E+04	1.0000E+02
29.23	-0.01269	7.4250E-04	1.5498E+09	5.3020E+07	1.8139E+06	-6.7283E+05	-2.3018E+04	2.9210E+02
31.04	-0.01321	8.1320E-04	1.4570E+09	4.6938E+07	1.5122E+06	-6.2005E+05	-1.9976E+04	2.6388E+02
25.73	-0.00392	7.4330E-04	1.1982E+09	4.6570E+07	1.8100E+06	-1.8255E+05	-7.0950E+03	2.7812E+01
27.4	-0.00845	7.7078E-04	1.2637E+09	4.6120E+07	1.6832E+06	-3.8972E+05	-1.4223E+04	1.2019E+02
21.24	-0.0241	8.0156E-04	7.0216E+08	3.3058E+07	1.5564E+06	-7.9671E+05	-3.7510E+04	9.0398E+02
23.51	-0.01169	8.3451E-04	7.9368E+08	3.3759E+07	1.4360E+06	-3.9465E+05	-1.6786E+04	1.9623E+02
20.3	4E-05	7.8518E-04	6.6843E+08	3.2928E+07	1.6221E+06	1.3171E+03	6.4882E+01	2.5953E-03
19.85	-0.00721	8.3546E-04	5.6450E+08	2.8438E+07	1.4327E+06	-2.0504E+05	-1.0330E+04	7.4476E+01
14.39	-0.01841	8.7784E-04	2.6872E+08	1.8674E+07	1.2977E+06	-3.4378E+05	-2.3890E+04	4.3982E+02
17.49	0.00553	7.9398E-04	4.8525E+08	2.7744E+07	1.5863E+06	1.5343E+05	8.7722E+03	4.8510E+01
3.3032	-0.0039	9.0028E-04	1.3462E+07	4.0755E+06	1.2338E+06	-1.5894E+04	-4.8118E+03	1.8766E+01
4.0351	-0.00138	9.4048E-04	1.8408E+07	4.5620E+06	1.1306E+06	-6.2956E+03	-1.5602E+03	2.1531E+00
2.712	0.0008	9.5483E-04	8.0673E+06	2.9747E+06	1.0969E+06	2.3797E+03	8.7748E+02	7.0199E-01
4.251	-0.00242	8.2735E-04	2.6400E+07	6.2104E+06	1.4609E+06	-1.5029E+04	-3.5354E+03	8.5557E+00
7.0098	-0.00142	8.6279E-04	6.6009E+07	9.4167E+06	1.3434E+06	-1.3372E+04	-1.9076E+03	2.7088E+00
6.1465	0.00603	8.9107E-04	4.7581E+07	7.7412E+06	1.2594E+06	4.6679E+04	7.5945E+03	4.5795E+01
6.9535	-0.00125	8.1394E-04	7.2983E+07	1.0496E+07	1.5094E+06	-1.3120E+04	-1.8868E+03	2.3585E+00
6.5125	0.0015	8.4149E-04	5.9896E+07	9.1971E+06	1.4122E+06	1.3796E+04	2.1183E+03	3.1775E+00
2.6463	-0.0012	1.0114E-03	6.8461E+06	2.5871E+06	9.7761E+05	-3.1045E+03	-1.1731E+03	1.4078E+00
5.0861	-0.00455	8.3487E-04	3.7114E+07	7.2971E+06	1.4347E+06	-3.3202E+04	-6.5280E+03	2.9702E+01
6.0808	-0.00563	9.1967E-04	4.3717E+07	7.1894E+06	1.1823E+06	-4.0476E+04	-6.6564E+03	3.7476E+01
6.0433	-0.00233	8.7681E-04	4.7505E+07	7.8607E+06	1.3007E+06	-1.8315E+04	-3.0307E+03	7.0615E+00
5.058	-0.00074	8.4149E-04	3.6130E+07	7.1431E+06	1.4122E+06	-5.2859E+03	-1.0451E+03	7.7334E-01
2.1583	-0.00203	8.6279E-04	6.2577E+06	2.8994E+06	1.3434E+06	-5.8857E+03	-2.7270E+03	5.5359E+00

Table VII-3. Parameters Evaluated for Simple Case Bias and Uncertainty Linear Fit.

X	Y		Evaluated Parameters					
5.6022	-0.00217	8.8459E-04	4.0108E+07	7.1594E+06	1.2780E+06	-1.5536E+04	-2.7732E+03	6.0178E+00
5.377	-0.00032	9.3349E-04	3.3179E+07	6.1705E+06	1.1476E+06	-1.9746E+03	-3.6723E+02	1.1751E-01
Total of Parameters:			1.4254E+10	6.3578E+08	4.2518E+07	-2.3909E+06	-1.4031E+05	3.1249E+03

From Equation 13 the following can be evaluated:

$$\Delta = \Sigma_i \frac{1}{\sigma_i^2} * \Sigma_i \frac{X_i^2}{\sigma_i^2} - \left(\Sigma_i \frac{X_i}{\sigma_i^2} \right)^2 = 2.0185\text{E}17$$

$$\text{where} \quad a = \left(\frac{1}{\Delta} \right) \left(\Sigma_i \frac{X_i^2}{\sigma_i^2} * \Sigma_i \frac{\Delta k_{effi}}{\sigma_i^2} - \Sigma_i \frac{X_i}{\sigma_i^2} * \Sigma_i \frac{X_i \Delta k_{effi}}{\sigma_i^2} \right) = \text{-2.377E-3}$$

$$b = \left(\frac{1}{\Delta} \right) \left(\Sigma_i \frac{1}{\sigma_i^2} * \Sigma_i \frac{X_i \Delta k_{effi}}{\sigma_i^2} - \Sigma_i \frac{X_i}{\sigma_i^2} * \Sigma_i \frac{\Delta k_{effi}}{\sigma_i^2} \right) = \text{-6.169E-5}$$

To test for a statistical significance the parameters in Equations 10 - 12 are evaluated in Table VII-4.

Table VII-4. Student T Test for Statistical Significance

X	Y		
Burn-up	**Δk_{eff}**	**S_{xx}**	**SS_R**
18.96	0.00152	26.9826	2.57E-05
33.07	0.01225	372.6629	2.78E-04
33.94	0.01161	407.0096	2.59E-04
17.84	-0.0087	16.6014	2.73E-05
29.23	-0.01269	239.1501	7.24E-05
31.04	-0.01321	298.4077	7.95E-05
25.73	-0.00392	143.1488	2.00E-09
27.4	-0.00845	185.8990	1.92E-05
21.24	-0.0241	55.8679	4.17E-04

Table VII-4. Student T Test for Statistical Significance

23.51	-0.01169	94.9549	6.18E-05
20.3	4E-05	42.6994	1.35E-05
19.85	-0.00721	37.0209	1.30E-05
14.39	-0.01841	0.3900	2.29E-04
17.49	0.00553	13.8718	8.08E-05
3.3032	-0.0039	109.4601	1.74E-06
4.0351	-0.00138	94.6811	1.55E-06
2.712	0.0008	122.1803	1.12E-05
4.251	-0.00242	90.5261	4.83E-08
7.0098	-0.00142	45.6398	1.93E-06
6.1465	0.00603	58.0495	7.72E-05
6.9535	-0.00125	46.4036	2.42E-06
6.5125	0.0015	52.6063	1.83E-05
2.6463	-0.0012	123.6371	1.80E-06
5.0861	-0.00455	75.3323	3.46E-06
6.0808	-0.00563	59.0549	8.28E-06
6.0433	-0.00233	59.6327	1.77E-07
5.058	-0.00074	75.8209	3.80E-06
2.1583	-0.00203	134.7276	2.31E-07
5.6022	-0.00217	66.6398	3.06E-07
5.377	-0.00032	70.3673	5.71E-06
Average: 13.7655	**Totals:**	**3219.43**	**1.71E-03**

Evaluating Equation 10 for the Simple BWR Case:

$$T = b\sqrt{\frac{(n-2)S_{xx}}{SS_R}} = \text{-6.169E - 05}\sqrt{\frac{28*3219.43}{1.71E^{-3}}} = -0.447$$

With the absolute value of T = 0.447. The Microsoft Excel© function representing 30 data points and a confidence of 95% is found with the Inverse Student T function TINV(0.05,28) = 2.05. Therefore, the evaluated absolute value of T is less than the Student T (0.447 < 2.05) indicating that there is no statistically significant trend in the data.

ATTACHMENT VIII
Normal Distribution Determination

The Shapiro-Wilk Test for Normality from *Guide for Validation of "Nuclear Criticality Safety Calculational Methodology"* (Dean and Tayloe 2001) specifics that the data must be listed in ascending order as presented in Table VIII-1.

The term "levers" is used to indicate the term $(\Delta k_{eff}\text{-average}(\Delta k_{eff}))^2$, for every case. The sum of the levers (S^2) is then used in the test. The Shapiro-Wilk coefficients for 31-40 samples are used from Table A.3 of *GUIDE FOR VALIDATION OF "NUCLEAR CRITICALITY SAFETY CALCULATIONAL METHODOLOGY"* (Dean and Tayloe 2001). Table VIII-2 pulls together the remaining data to make the determination.

For the simple BWR case the Shapiro-Wilk Test for Normality from Dean and Tayloe (2001) is presented in Table VIII-1.

Table VIII-1. Simple BWR Case Ascending Order

Reactor	Case	Δk_{eff} (k_{SAS2H}-k_{RCA})	Ascending Order	Levers
Cooper	C1	0.00152	-0.02507	4.2178E-04
	C2	0.01225	-0.01789	1.7842E-04
	C3	0.01161	-0.01321	7.5296E-05
	C4	-0.00870	-0.01269	6.6542E-05
	C5	-0.01269	-0.01250	6.3478E-05
	C6	-0.01321	-0.01015	3.1554E-05
Gundremmingen	G1	-0.00731	-0.00871	1.7450E-05
	G2	-0.01015	-0.00870	1.7367E-05
	G3	-0.02507	-0.00766	9.7802E-06
	G4	-0.01250	-0.00731	7.7136E-06
	G5	-0.00213	-0.00635	3.3027E-06
	G6	-0.00871	-0.00627	3.0183E-06
	G7	-0.01789	-0.00507	2.8873E-07
	G8	0.00350	-0.00446	5.2804E-09
JPDR	J1	-0.00446	-0.00423	9.1607E-08
	J2	-0.00111	-0.00387	4.3913E-07
	J3	0.00038	-0.00353	1.0053E-06
	J4	-0.00246	-0.00335	1.3987E-06
	J5	-0.00353	-0.00288	2.7313E-06
	J6	0.00502	-0.00246	4.2959E-06
	J7	-0.00335	-0.00213	5.7728E-06
	J8	-0.00051	-0.00111	1.1715E-05
	J9	-0.00387	-0.00051	1.6182E-05
	J10	-0.00627	-0.00015	1.9208E-05
	J11	-0.00766	0.00038	2.4134E-05
	J12	-0.00635	0.00152	3.6635E-05
	J13	-0.00423	0.00350	6.4524E-05
	J14	-0.00288	0.00502	9.1253E-05

Table VIII-1. Simple BWR Case Ascending Order

Reactor	Case	Δk_{eff} (k_{SAS2H}-k_{RCA})	Ascending Order	Levers
JPDR	J15	-0.00507	0.01161	2.6059E-04
	J16	-0.00015	0.01225	2.8166E-04
	Average:	-0.00453	S^2 =	**0.00172**

The Shapiro-Wilk coefficients for 21-30 Samples are used from Table A.2 of Dean and Tayloe (2001). Table VIII-2 pulls together the remaining data to make the determination.

Table VIII-2. Simple BWR Case Normal Distribution Determination

Shapiro-Wilk Coefficients	Data Indexes n+1-j	Data Indexes j	Corresponding Values $y_{(n+1-j)}$	Corresponding Values y_j	Difference $y_{(n+1-j)}$-y_j	Indicated Multiplication Coeff*(delta)
0.4254	30	1	0.01225	-0.02507	0.03732	0.01588
0.2944	29	2	0.01161	-0.01789	0.02950	0.00868
0.2487	28	3	0.00502	-0.01321	0.01823	0.00453
0.2148	27	4	0.00350	-0.01269	0.01619	0.00348
0.1870	26	5	0.00152	-0.01250	0.01402	0.00262
0.1630	25	6	0.00038	-0.01015	0.01053	0.00172
0.1415	24	7	-0.00015	-0.00871	0.00856	0.00121
0.1219	23	8	-0.00051	-0.00870	0.00819	0.00100
0.1036	22	9	-0.00111	-0.00766	0.00655	0.00068
0.0862	21	10	-0.00213	-0.00731	0.00518	0.00045
0.0697	20	11	-0.00246	-0.00635	0.00389	0.00027
0.0537	19	12	-0.00288	-0.00627	0.00339	0.00018
0.0381	18	13	-0.00335	-0.00507	0.00172	0.00007
0.0227	17	14	-0.00353	-0.00446	0.00093	0.00002
0.0076	16	15	-0.00387	-0.00423	0.00036	0.00000
					Total: Y =	**0.04079**

With the simple case data developed in Table VIII-1 and 2, Equation 16 can be evaluated to:

$$W_{30}(\Delta k_{eff}) = \frac{Y^2}{S^2} = \frac{0.04079^2}{0.00172} = 0.969$$

The passing criteria for normal distribution is that $W_{30} < W_t(\Delta k_{eff})_{30}$, with W_{30} = 0.927 as given in Table A.5 of
Dean and Tayloe (2001). (i.e., 0.927 < 0.969 is TRUE)

Therefore, the simple BWR case passes the Shapiro-Wilk test for normal distribution.

ATTACHMENT IX
General BWR Case Lower Uniform Tolerance Band

Table IX-1 provides the parameters required to determine the tolerance band for the general BWR case.

Table IX-1. Evaluation of the Lower Uniform Tolerance Band

X	Y		Evaluated Parameters					
Burn-up[a]	Δk_{eff}[a]	RS(σ)	$RS(\sigma)^2$	x_i-av(x)	Δk_{effi}-av(Δk_{eff})	product[b]	$(x_i\text{-av}(x))^2$	$(\Delta k_{effi}\text{-av}(\Delta k_{eff}))^2$
54.84	-0.04204	6.8768E-04	4.7290E-07	3.1954E+01	-3.2244E-02	-1.0303E+00	1.0211E+03	1.0397E-03
37.02	-0.05870	7.1449E-04	5.1050E-07	1.4134E+01	-4.8904E-02	-6.9120E-01	1.9977E+02	2.3916E-03
62.11	0.02053	6.0141E-04	3.6170E-07	3.9224E+01	3.0326E-02	1.1895E+00	1.5385E+03	9.1969E-04
65.54	0.00336	6.3702E-04	4.0580E-07	4.2654E+01	1.3156E-02	5.6117E-01	1.8194E+03	1.7309E-04
64.95	-0.06713	6.3891E-04	4.0820E-07	4.2064E+01	-5.7334E-02	-2.4117E+00	1.7694E+03	3.2872E-03
56.52	-0.06417	6.7882E-04	4.6080E-07	3.3634E+01	-5.4374E-02	-1.8288E+00	1.1312E+03	2.9565E-03
57.915	-0.03369	6.3032E-04	3.9730E-07	3.5029E+01	-2.3894E-02	-8.3697E-01	1.2270E+03	5.7091E-04
57.81	-0.03198	7.1421E-04	5.1010E-07	3.4924E+01	-2.2184E-02	-7.7474E-01	1.2197E+03	4.9212E-04
18.96	0.00152	7.9906E-04	6.3850E-07	-3.9261E+00	1.1316E-02	-4.4429E-02	1.5414E+01	1.2806E-04
33.07	0.01225	7.2139E-04	5.2040E-07	1.0184E+01	2.2046E-02	2.2452E-01	1.0371E+02	4.8604E-04
33.94	0.01161	8.3451E-04	6.9640E-07	1.1054E+01	2.1406E-02	2.3662E-01	1.2219E+02	4.5823E-04
17.84	-0.00870	8.7000E-04	7.5690E-07	-5.0461E+00	1.0963E-03	-5.5321E-03	2.5463E+01	1.2019E-06
29.23	-0.01269	7.4250E-04	5.5130E-07	6.3439E+00	-2.8937E-03	-1.8357E-02	4.0245E+01	8.3734E-06
31.04	-0.01321	8.1320E-04	6.6130E-07	8.1539E+00	-3.4137E-03	-2.7835E-02	6.6487E+01	1.1653E-05
25.73	-0.00392	7.4330E-04	5.5250E-07	2.8439E+00	5.8763E-03	1.6712E-02	8.0879E+00	3.4531E-05
27.4	-0.00845	7.7078E-04	5.9410E-07	4.5139E+00	1.3463E-03	6.0772E-03	2.0376E+01	1.8126E-06
21.24	-0.02410	8.0156E-04	6.4250E-07	-1.6461E+00	-1.4304E-02	2.3545E-02	2.7095E+00	2.0460E-04
23.51	-0.01169	8.3451E-04	6.9640E-07	6.2393E-01	-1.8937E-03	-1.1815E-03	3.8929E-01	3.5860E-06
20.3	0.00004	7.8518E-04	6.1650E-07	-2.5861E+00	9.8363E-03	-2.5437E-02	6.6877E+00	9.6753E-05
19.85	-0.00721	8.3546E-04	6.9800E-07	-3.0361E+00	2.5863E-03	-7.8522E-03	9.2177E+00	6.6890E-06
14.39	-0.01841	8.7784E-04	7.7060E-07	-8.4961E+00	-8.6137E-03	7.3182E-02	7.2183E+01	7.4196E-05
17.49	0.00553	7.9398E-04	6.3040E-07	-5.3961E+00	1.5326E-02	-8.2702E-02	2.9118E+01	2.3490E-04
3.3032	-0.00390	9.0028E-04	8.1050E-07	-1.9583E+01	5.8963E-03	-1.1547E-01	3.8349E+02	3.4767E-05
4.0351	-0.00138	9.4048E-04	8.8450E-07	-1.8851E+01	8.4163E-03	-1.5866E-01	3.5536E+02	7.0834E-05
2.712	0.00080	9.5483E-04	9.1170E-07	-2.0174E+01	1.0596E-02	-2.1377E-01	4.0699E+02	1.1228E-04
4.251	-0.00242	8.2735E-04	6.8450E-07	-1.8635E+01	7.3763E-03	-1.3746E-01	3.4727E+02	5.4410E-05
7.0098	-0.00142	8.6279E-04	7.4440E-07	-1.5876E+01	8.3763E-03	-1.3298E-01	2.5206E+02	7.0163E-05
6.1465	0.00603	8.9107E-04	7.9400E-07	-1.6740E+01	1.5826E-02	-2.6493E-01	2.8021E+02	2.5047E-04
6.9535	-0.00125	8.1394E-04	6.6250E-07	-1.5933E+01	8.5463E-03	-1.3616E-01	2.5385E+02	7.3040E-05
6.5125	0.00150	8.4149E-04	7.0810E-07	-1.6374E+01	1.1296E-02	-1.8496E-01	2.6809E+02	1.2761E-04
2.6463	-0.00120	1.0114E-03	1.0229E-06	-2.0240E+01	8.5963E-03	-1.7399E-01	4.0965E+02	7.3897E-05
5.0861	-0.00455	8.3487E-04	6.9700E-07	-1.7800E+01	5.2463E-03	-9.3384E-02	3.1684E+02	2.7524E-05
6.0808	-0.00563	9.1967E-04	8.4580E-07	-1.6805E+01	4.1663E-03	-7.0016E-02	2.8242E+02	1.7358E-05
6.0433	-0.00233	8.7681E-04	7.6880E-07	-1.6843E+01	7.4663E-03	-1.2575E-01	2.8368E+02	5.5746E-05
5.058	-0.00074	8.4149E-04	7.0810E-07	-1.7828E+01	9.0563E-03	-1.6146E-01	3.1784E+02	8.2017E-05
2.1583	-0.00203	8.6279E-04	7.4440E-07	-2.0728E+01	7.7663E-03	-1.6098E-01	4.2964E+02	6.0316E-05
5.6022	-0.00217	8.8459E-04	7.8250E-07	-1.7284E+01	7.6263E-03	-1.3181E-01	2.9873E+02	5.8161E-05

Table IX-1. Evaluation of the Lower Uniform Tolerance Band

X	Y		Evaluated Parameters					
Burn-up[a]	Δk_{eff}[a]	RS(σ)	RS(σ)^2	x_i-av(x)	Δk_{effi}-av(Δk_{eff})	product[b]	(x_i-av(x))^2	(Δk_{effi}-av(Δk_{eff}))^2
5.377	-0.00032	9.3349E-04	8.7140E-07	-1.7509E+01	9.4763E-03	-1.6592E-01	3.0657E+02	8.9801E-05
22.88607	-0.0098	**Totals:**	2.5194E-05			-7.8834E+00	1.5641E+04	1.4840E-02

Notes: [a] Average values are listed at the bottom of the column.
[b] Product indicates the required multiplication of the terms: (x_i-av(x)) * Δk_{effi}-av(Δk_{eff})

Method 2 of Lichtenwalter et al. (1997, section 4.1.2) specifies the range of Δk_{eff} from a = 2.1583 to b = 65.54. Section 5.2.10.1 defines a number of parameters that can be solved from Table IX-1.

from Eq. 20: $g = \sqrt{\frac{1}{n} + \frac{(a-\bar{x})^2}{\sum_{i=1}^{n}(x_i - \bar{x})^2}}$ = sqrt(1/36 + (2.1583-22.8807)^2/1.5641x10^4) = 0.2319

from Eq. 21: $h = \sqrt{\frac{1}{n} + \frac{(b-\bar{x})^2}{\sum_{i=1}^{n}(x_i - \bar{x})^2}}$ = sqrt(1/36 + (65.54-22.8807)^2/1.5641x10^4) = 0.3777

from Eq. 22: $\rho = \frac{1}{gh} * \left\{ \frac{1}{n} + \frac{(a-\bar{x})(b-\bar{x})}{\sum_{i=1}^{n}(x_i - \bar{x})^2} \right\} =$

(1/36+(2.1583-22.8807) * (65.54-22.8807)/1.5641x10^4)/0.2319*0.3777 = -0.34491

from Eq 23: A = g/h = 0.2319/0.3777 = 0.614

The derived values of A, ρ and (n-2) are required to find the value "D" from Table 3, Bowden and Graybill (1963). Per the calculations above: A = 0.614, ρ = -0.345 and n-2 is 36. Per Bowden and Graybill (1963, Table 3) the value of D for (n-2) = 30 is 2.88, the value of D for (n-2) = 40 is 2.85. Using straight-line interpolations, the D values are filled out for A=0.6 and A=0.7. Since there is a greater slope for the A values than the (n-2) values there is much more impact to D when the straight line interpolation is done for the A=0.614 value. As shown in Table IX-1 and Table 5-16.

Table IX-1. Interpolations for D Value

(n-2) / A	0.6	0.614	0.7
30	2.88[a]	2.83	2.53[a]
36	2.86	2.81	2.52
40	2.85[a]	2.80	2.51[a]

Source: Bowden and Graybill (1963, Table 3)

Notes: [a] Published values

Since A is within the range of $0.5 \leq A \leq 1.5$, the following equation can be used:

From Eq. 24: C* = D * g = 2.81 * 0.2319 = 0.6563

To finish the calculation the following statistical functions have to be evaluated:

z_P = The Student-t distribution statistic for (1-0.95) and (n-1) degrees of freedom (obtained from Microsoft Excel © function "TINV(0.05,37)"= 2.0266)

X^2 = The Chi-Squared distribution statistic for 0.95 and (n-2) degrees of freedom (obtained from Microsoft Excel © function "CHIINV(0.95,38)"= 23.2686)

from Eq. 19: $C_{\alpha/P} = C^* + z_P\sqrt{\frac{(n-2)}{X^2}}$ = 0.6563 + 2.0244**sqrt*(36/23.2686)

= 0.6563 + 2.5180= 3.1744

Evaluating Equation 27 for the within variance (mean-square error):

$$S_w^2 = \frac{1}{n}\sum_{i=1,n} RS(\sigma)_i^2 = \frac{2.5194\text{E-05}}{38} = 6.6301\text{E-07}$$

Evaluating Equation 25 for the variance of the regression fit:

$$S_{k(x)}^2 = \frac{1}{(n-2)}\left[\sum_{i=1,n}(\Delta k_{eff\hat{i}_i} - \overline{\Delta k_{eff}})^2 - \frac{\left\{\sum_{i=1,n}(x_i - \bar{x})(\Delta k_{eff_i} - \overline{\Delta k_{eff}})\right\}^2}{\sum_{i=1,n}(x_i - \bar{x})^2}\right]$$

$$= \frac{1}{36}\left[1.4840\text{E-02} - \frac{-7.8834^2}{1.5641\text{E+04}}\right] = 3.0184\text{E-04}$$

Evaluating Equation 25 for the standard deviation:

$$S_p = \left[S_{k(x)}^2 + S_w^2\right]^{\frac{1}{2}} = sqrt(3.0184\text{E-}04 + 6.6301\text{E-}07) = 1.7393\text{E-}02$$

All of the required terms are now available to complete Equation 18:

$$\Delta\beta_G(x) = C_{\alpha/P} * S_P = 3.1766 * 1.7393\text{E-}02 = 0.05525$$

ATTACHMENT X
Simple BWR Case Normal Distribution Tolerance Band

Table X-1 provides the parameters required to determine the tolerance band for the simple BWR case.

Table X-1 Parameters to Determine Simple BWR Confidence Level

X	Y		Evaluated Parameters		
Burn-up	Δk_{eff}	RS(σ)	Δk_{eff}	Δk_{eff}^2	$RS(\sigma)^2$
18.96	0.00152	7.9906E-04	1.520E-03	2.310E-06	6.385E-07
33.07	0.01225	7.2139E-04	1.225E-02	1.501E-04	5.204E-07
33.94	0.01161	8.3451E-04	1.161E-02	1.348E-04	6.964E-07
17.84	-0.0087	8.7000E-04	-8.700E-03	7.569E-05	7.569E-07
29.23	-0.01269	7.4250E-04	-1.269E-02	1.610E-04	5.513E-07
31.04	-0.01321	8.1320E-04	-1.321E-02	1.745E-04	6.613E-07
25.73	-0.00392	7.4330E-04	-3.920E-03	1.537E-05	5.525E-07
27.4	-0.00845	7.7078E-04	-8.450E-03	7.140E-05	5.941E-07
21.24	-0.0241	8.0156E-04	-2.410E-02	5.808E-04	6.425E-07
23.51	-0.01169	8.3451E-04	-1.169E-02	1.367E-04	6.964E-07
20.3	4E-05	7.8518E-04	4.000E-05	1.600E-09	6.165E-07
19.85	-0.00721	8.3546E-04	-7.210E-03	5.198E-05	6.980E-07
14.39	-0.01841	8.7784E-04	-1.841E-02	3.389E-04	7.706E-07
17.49	0.00553	7.9398E-04	5.530E-03	3.058E-05	6.304E-07
3.3032	-0.0039	9.0028E-04	-3.900E-03	1.521E-05	8.105E-07
4.0351	-0.00138	9.4048E-04	-1.380E-03	1.904E-06	8.845E-07
2.712	0.0008	9.5483E-04	8.000E-04	6.400E-07	9.117E-07
4.251	-0.00242	8.2735E-04	-2.420E-03	5.856E-06	6.845E-07
7.0098	-0.00142	8.6279E-04	-1.420E-03	2.016E-06	7.444E-07
6.1465	0.00603	8.9107E-04	6.030E-03	3.636E-05	7.940E-07
6.9535	-0.00125	8.1394E-04	-1.250E-03	1.562E-06	6.625E-07
6.5125	0.0015	8.4149E-04	1.500E-03	2.250E-06	7.081E-07
2.6463	-0.0012	1.0114E-03	-1.200E-03	1.440E-06	1.023E-06
5.0861	-0.00455	8.3487E-04	-4.550E-03	2.070E-05	6.970E-07
6.0808	-0.00563	9.1967E-04	-5.630E-03	3.170E-05	8.458E-07
6.0433	-0.00233	8.7681E-04	-2.330E-03	5.429E-06	7.688E-07
5.058	-0.00074	8.4149E-04	-7.400E-04	5.476E-07	7.081E-07
2.1583	-0.00203	8.6279E-04	-2.030E-03	4.121E-06	7.444E-07
5.6022	-0.00217	8.8459E-04	-2.170E-03	4.709E-06	7.825E-07
5.377	-0.00032	9.3349E-04	-3.200E-04	1.024E-07	8.714E-07
Average:	-3.281E-03	Totals:	-9.844E-02	2.059E-03	2.167E-05

To complete Equations 29 through 31, the following parameters can be evaluated from Table X-1.

Equation 30 can be evaluated to:

$$\sigma_{\Delta k_{eff}} = \frac{N\sum_{i=1}^{30}\Delta k_{eff}{}^{2} - \left(\sum_{i=1}^{30}\Delta k_{eff}\right)^{2}}{N(N-1)} = 7.736\text{E-}03$$

Equation 31 can be evaluated to:

$$\sigma_{MCNP} = \sqrt{\frac{\sum_{i=1}^{N} RS(\sigma)_i}{N}} = 8.498\text{E-}04$$

From Table X-1 the average Δk_{eff} can be found:

$$\overline{\Delta k_{eff}} = -3.281\text{E-}03$$

K_b was found from Natrella 1963, Table A-7:

$$K_b = 2.220$$

Substituting and reducing the parameters, Equation 29 becomes:

$$\text{Sum of Bias and Uncertainty} = \overline{\Delta k_{eff}} - K_b * \sqrt{\sigma^2_{\Delta k_{eff}} - \sigma^2_{MCNP}} =$$

$$-3.281\text{E-}03 - 2.220*\text{sqrt}(7.736\text{E-}03^2 - 8.498\text{E-}04^2) = -0.021$$

ATTACHMENT XI
Zip Files Description

This attachment contains a listing and description of the zip file contained on the attachment CD of this calculation (Attachment XII). The CD was written using the Hewlett Packard (HP) CD-Writer Plus model 7200e external CD-rewritable drive for personal computers, and the zip archive was created using WINZIP 8.1.

The following is a description of the archive file. Table XI-1 provides the directory structure and number of files in the archive. The SAS2H Cases section provides a description of the SAS2H files that were retained. Table XI-2 provides the complete listing of the MCNP files, the table notes provide the designations of input and output files. RCA and SAS2H isotopic runs are distinguished by "-M" for measured data (RCA) and "-S" for a run containing SAS2H isotopic concentrations.

Filename	File Size (bytes)	File Date	File Time	Description
CAL-DSU-NU-000003 REV 000.zip	5,089,461	9/30/2003	1:17p	Zipped Archive containing SCALE and MCNP.

Table XI-1. CD Directory Structure

	Directory	Sub-Directory	Files
CD			300
	Cooper		60
		Coop-MCNP	24
		Coop-SAS2H	36
	Gundremmingen		80
		Gund-MCNP	32
		Gund-SAS2H	48
	JPDR		160
		JPDR-MCNP	64
		JPDR-SAS2H	96

SAS2H Cases

In the individual directories, sub-directories labeled Coop-SAS2H, Gund-SAS2H, and JPDR-SAS2H designate the SAS2H directories, they contain file structures as described below:

N.inp* files are the SAS2H input files, where N* represents the corresponding fuel node. For Cooper, Table I-1 provides the node numbers with the corresponding sample information. For Gundremmingen, Table II-1 provides the corresponding sample information. JPDR corresponding sample information is given in Table III-1.

N.log* files contains an echo of the input and pertinent information extracted from the SAS2H output file prior to discarding, to indicate that the case ran successfully. The N* represents the corresponding fuel node.

N.msg* files are generated by SAS2H and contain the standard run-time messages associated with the SAS2H calculations, where the N* represents the corresponding fuel node.

*ft72f001.N** files are binary files generated by ORIGEN-S for each time step, which were retained, that contain the isotopic concentrations as a function of time. The N* represents the corresponding fuel node.

act_N.mass* files contain the extracted actinide isotopes from the *ft72f001.N** files and provides them in units of grams

fp_N.mass files* contain the extracted fission product isotopes from the *ft72f001.N** files and provides them in units of grams

In the individual directories, sub-directories labeled Coop-MCNP, Gund-MCNP, and JPDR-MCNP designate the MCNP directories, they contain file structures as described in Table XI-2.

Table XI-2. MCNP Filename Identification

File Name[a]	Burn-up (GWd/MTU)	Assay Designation	Rod	Cut
C1	18.96	cz346	Add2966	B
C2	33.07	cz346	Add2966	K
C3	33.94	cz346	Add2966	T
C4	17.84	cz346	Add2974	B
C5	29.23	cz346	Add2974	J
C6	31.04	cz346	Add2974	U
G1	25.73	B23	al	44 cm
G2	27.40	B23	Al	268 cm
G3	21.24	B23	B3	268 cm
G4	23.51	B23	E3	268 cm
G5	20.30	C16	al	44 cm
G6	19.85	C16	al	268 cm
G7	14.39	C16	B3	268 cm
G8	17.49	C16	E5	268 cm
J1	3.3032	a-14	c-d-3-4	2
J2	4.0351	a-14	c-d-3-4	9
J3	2.7120	a-18	c-d-3-4	2
J4	4.2510	a-18	c-d-3-4	6
J5	7.0098	a-20	a-1	3
J6	6.1465	a-20	a-3	10
J7	6.9535	a-20	a-6	3
J8	6.5125	a-20	a-6	9
J9	2.6463	a-20	c-3	1
J10	5.0861	a-20	c-3	3

Table XI-2. MCNP Filename Identification

File Name[a]	Burn-up (GWd/MTU)	Assay Designation	Rod	Cut
J11	6.0808	a-20	c-3	5
J12	6.0433	a-20	c-3	8
J13	5.0580	a-20	c-3	10
J14	2.1583	a-20	c-3	12
J15	5.6022	a-20	e-2	3
J16	5.3770	a-20	e-2	10

NOTE: [a] Output files have an “o” at the end of the file name.
“-M” implies Measured RCA Data was used, “-S” implies SAS2H Data was used.